NCP1_10A_VFD1

06600.01	NCP1_10A_VFD1_DISC DISCONNECT AUX	
06600.02	SPARE	
06600.03	SPARE	
06600.04	SPARE	
06600.05	NCP1_9_S1_PB START PUSHBUTTON	
06600.06	NCP1_9_S1_PB_LT START PUSHBUTTON LIGHT	
06600.07		
06600.08		
06600.09		
06600.10		
06600.11	NCP1_10B_VFD1_DISC DISCONNECT AUX	
06600.12	SPARE	
06600.13	SPARE	
06600.14	SPARE	
06600.15	NCP1_9_S2_PB START PUSHBUTTON	
06600.16	NCP1_9_S2_PB_LT START PUSHBUTTON LIGHT	
06600.17		
06600.18		
06600.19		
06600.20		

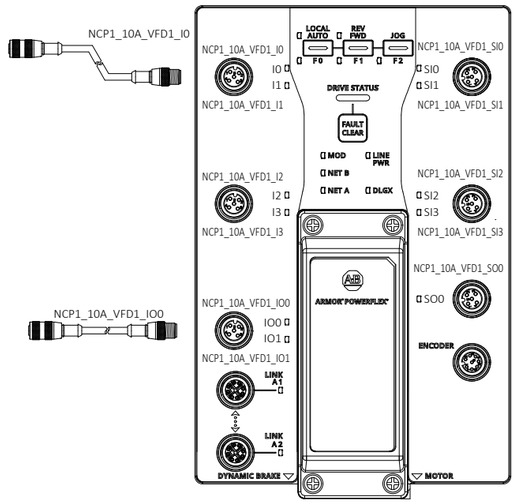

NCP1_10B_VFD1

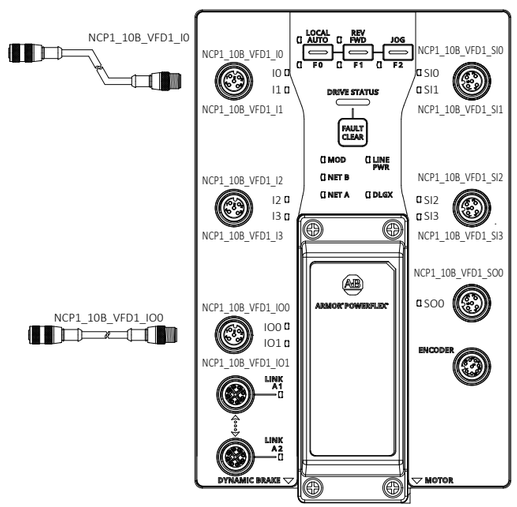

NCP1_11_VFD1

SPARE	06600.21	NCP1_11_VFD1_DISC DISCONNECT AUX
SPARE	06600.22	SPARE
SPARE	06600.23	NCP_11_TPE1 TRACKING PHOTOEYE
SPARE	06600.24	NCP_11_TPE2 TRACKING PHOTOEYE
SPARE	06600.25	SPARE
	06600.26	SPARE
	06600.27	
	06600.28	
	06600.29	
	06600.30	
SPARE	06600.31	NCP1_12_VFD1_DISC DISCONNECT AUX
SPARE	06600.32	SPARE
SPARE	06600.33	NCP1_12_TPE1 TRACKING PHOTOEYE
SPARE	06600.34	SPARE
SPARE	06600.35	SPARE
	06600.36	NCP1_12_ENC1 ENCODER
	06600.37	
	06600.38	
	06600.39	
	06600.40	

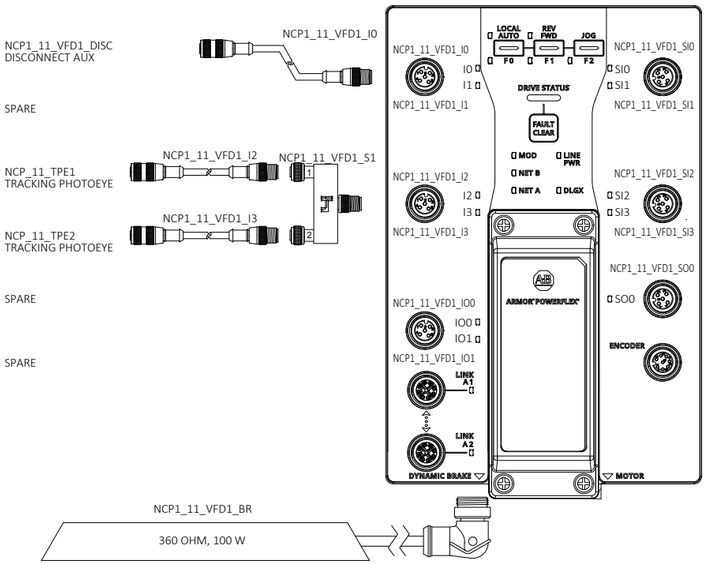

NCP1_12_VFD1

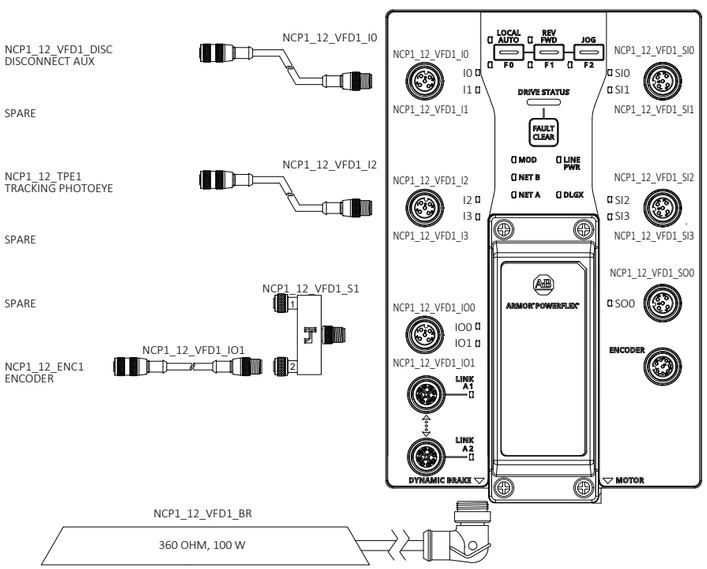

DRAWING REVISIONS

REV	DESCRIPTION	DATE	BY
00	INITIAL DRAWINGS	04/25/2025	SK
A	AS-BUILT	11/13/2025	LB

autStand
Automation Standard

CONFIDENTIAL: THE INFORMATION CONTAINED HEREIN IS PROPRIETARY INFORMATION OF AUTOMATION STANDARD LLC AND CONSTITUTES TRADE SECRETS PURSUANT TO THE UNIFORM TRADE SECRETS ACT. THIS INFORMATION SHALL ONLY BE USED IN THE PERFORMANCE OF CONTRACT WITH AUTSTAND. THIS INFORMATION SHALL NOT BE USED, REPRODUCED OR EMPLOYED IN WHOLE PART, EXCEPT WITH AUTSTAND'S PRIOR WRITTEN APPROVAL.

25K Amazon Cross-Belt Sort Center (ACBSC)
NCP1_10A_VFD1/NCP1_10B_VFD1/
NCP1_11_VFD1/NCP1_12_VFD1 IO DRAWINGS

AMAZON MTN6
SPARROWS POINT, MD

FILENAME	
2429-AMZ-MTN6-MCM06-600	
D-SIZE SCALE	JOB NUMBER:
NTS	2429
REVISION	SHEET
A	45

Plotted: 11/21/2025 4:42 PM

NCP1_13_VFD1

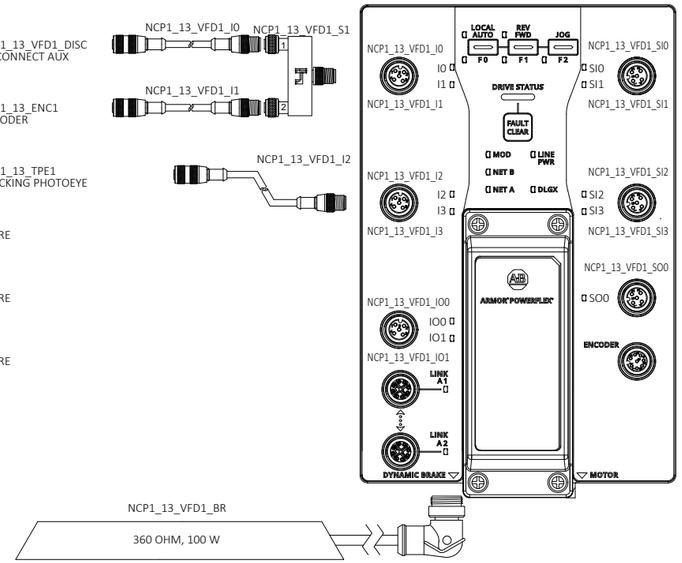

NCP1_14A_VFD1

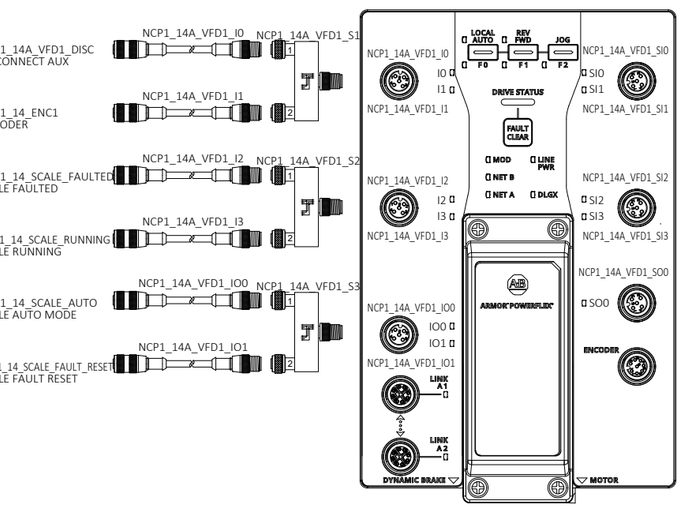

06601.01	NCP1_13_VFD1_DISC DISCONNECT AUX	
06601.02	NCP1_13_ENC1 ENCODER	
06601.03	NCP1_13_TPE1 TRACKING PHOTOEYE	
06601.04	SPARE	
06601.05	SPARE	
06601.06	SPARE	
06601.07		
06601.08		
06601.09		
06601.10		
06601.11	NCP1_14A_VFD1_DISC DISCONNECT AUX	
06601.12	NCP1_14_ENC1 ENCODER	
06601.13	NCP1_14_SCALE_FAULTED SCALE FAULTED	
06601.14	NCP1_14_SCALE_RUNNING SCALE RUNNING	
06601.15	NCP1_14_SCALE_AUTO SCALE AUTO MODE	
06601.16	NCP1_14_SCALE_FAULT_RESET SCALE FAULT RESET	
06601.17		
06601.18		
06601.19		
06601.20		

NCP1_14B_VFD1

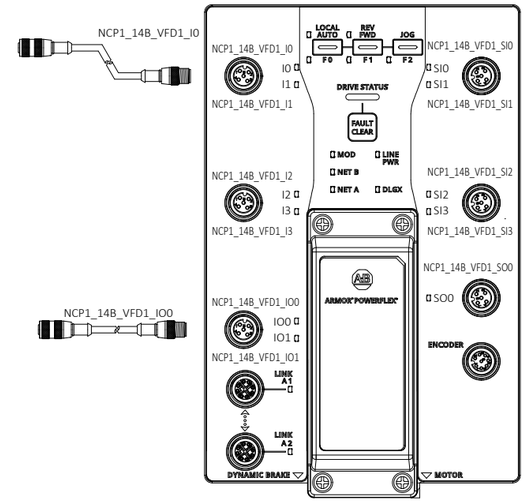

NCP1_14C_VFD1

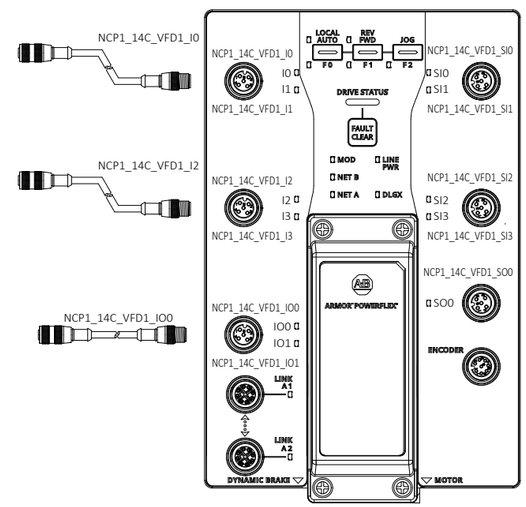

SPARE	06601.21 NCP1_14B_VFD1_DISC DISCONNECT AUX	SPARE
SPARE	06601.22 SPARE	SPARE
SPARE	06601.23 SPARE	SPARE
SPARE	06601.24 SPARE	SPARE
SPARE	06601.25 NCP1_15_S2_PB START PUSHBUTTON	SPARE
	06601.26 NCP1_15_S2_PB_LT START PUSHBUTTON LIGHT	
	06601.27	
	06601.28	
	06601.29	
	06601.30	
SPARE	06601.31 NCP1_14C_VFD1_DISC DISCONNECT AUX	SPARE
SPARE	06601.32 SPARE	SPARE
SPARE	06601.33 NCP1_14_SCALE_OVERWEIGHT OVERWEIGHT DETECTED	SPARE
SPARE	06601.34 SPARE	SPARE
SPARE	06601.35 NCP1_15_S1_PB START PUSHBUTTON	SPARE
	06601.36 NCP1_15_S1_PB_LT START PUSHBUTTON LIGHT	
	06601.37	
	06601.38	
	06601.39	
	06601.40	

DRAWING REVISIONS

REV	DESCRIPTION	DATE	BY
00	INITIAL DRAWINGS	04/25/2025	SK
A	AS-BUILT	11/13/2025	LB

autStand
Automation Standard

CONFIDENTIAL: THE INFORMATION CONTAINED HEREIN IS PROPRIETARY INFORMATION OF AUTOMATION STANDARD LLC AND CONSTITUTES TRADE SECRETS PURSUANT TO THE UNIFORM TRADE SECRETS ACT. THIS INFORMATION SHALL ONLY BE USED IN THE PERFORMANCE OF CONTRACT WITH AUTSTAND. THIS INFORMATION SHALL NOT BE USED, REPRODUCED OR EMPLOYED IN WHOLE PART, EXCEPT WITH AUTSTAND's PRIOR WRITTEN APPROVAL.

25K Amazon Cross-Belt Sort Center (ACBSC)
NCP1_13_VFD1/NCP1_14A_VFD1/
NCP1_14B_VFD1/NCP1_14C_VFD1 IO DRAWINGS

AMAZON MTN6
SPARROWS POINT, MD

FILENAME	
2429-AMZ-MTN6-MCM06-601	
D-SIZE SCALE	JOB NUMBER:
NTS	2429
REVISION	SHEET
A	46

Plotted: 11/21/2025 4:43 PM

NCP1_14D_VFD1

06602.01	NCP1_14D_VFD1_DISC DISCONNECT AUX
06602.02	SPARE
06602.03	SPARE
06602.04	SPARE
06602.05	NCP1_15_BCN2_A AMBER BEACON LIGHT
06602.06	NCP1_15_BCN2_R RED BEACON LIGHT
06602.07	
06602.08	
06602.09	
06602.10	

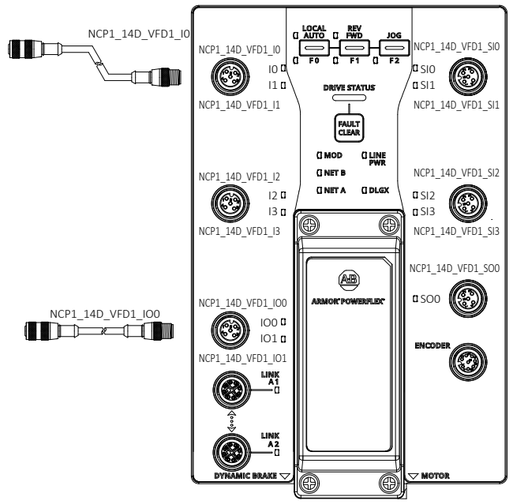

NCP1_15_VFD1

06602.11	NCP1_15_VFD1_DISC DISCONNECT AUX
06602.12	NCP1_15_ENC1 ENCODER
06602.13	NCP1_15_TPE1 TRACKING PHOTOEYE
06602.14	NCP1_15_TPE2 TRACKING PHOTOEYE
06602.15	NCP1_15_BCN1_R RED BEACON LIGHT
06602.16	NCP1_15_BCN1_H BEACON HORN
06602.17	
06602.18	
06602.19	
06602.20	

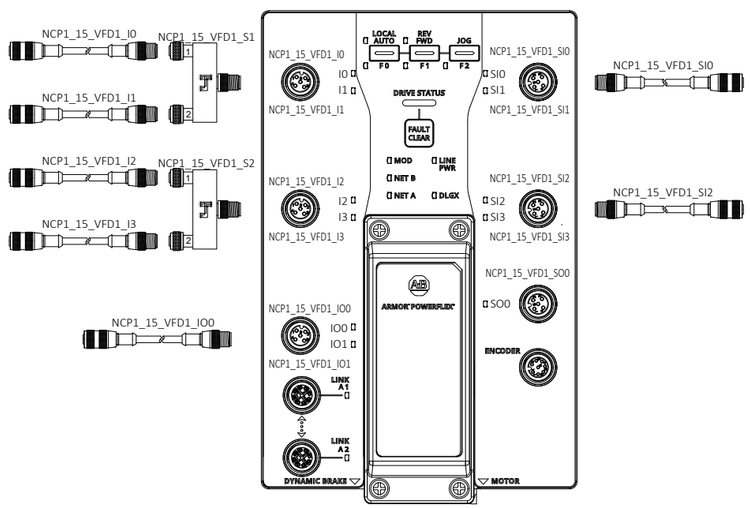

SPARE	
SPARE	
SPARE	
SPARE	
SPARE	
NCP1_15_EPC1 E-STOP PULLCORD	
NCP1_15_EPC1_2 E-STOP PULLCORD	
NCP1_15_EPC2 E-STOP PULLCORD	
NCP1_15_EPC2_2 E-STOP PULLCORD	
SPARE	

NCP1_16_VFD1

06602.21	NCP1_16_VFD1_DISC DISCONNECT AUX
06602.22	SPARE
06602.23	NCP1_16_ENC1 ENCODER
06602.24	SPARE
06602.25	NCP1_16_JR1_PB JAM RESET PUSHBUTTON
06602.26	NCP1_16_JR1_PB_LT JAM RESET PUSHBUTTON LIGHT
06602.27	
06602.28	
06602.29	
06602.30	

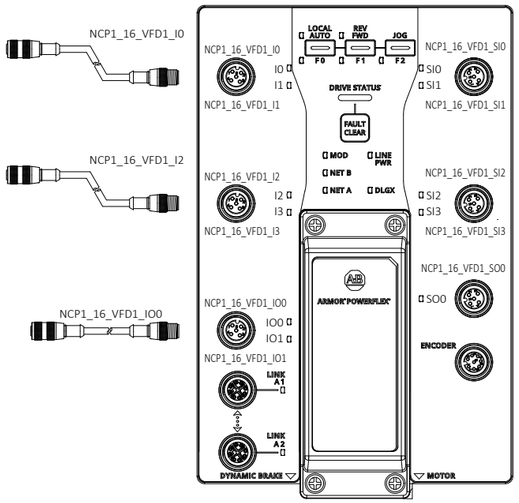

NCP1_17_VFD1

06602.31	NCP1_17_ENC1 ENCODER
06602.32	NCP1_17_VFD1_DISC DISCONNECT AUX
06602.33	NCP1_17_TPE1 TRACKING PHOTOEYE
06602.34	NCP1_17_TPE2 TRACKING PHOTOEYE
06602.35	NCP1_16_JR2_PB JAM RESET PUSHBUTTON
06602.36	NCP1_16_JR2_PB_LT JAM RESET PUSHBUTTON LIGHT
06602.37	
06602.38	
06602.39	
06602.40	

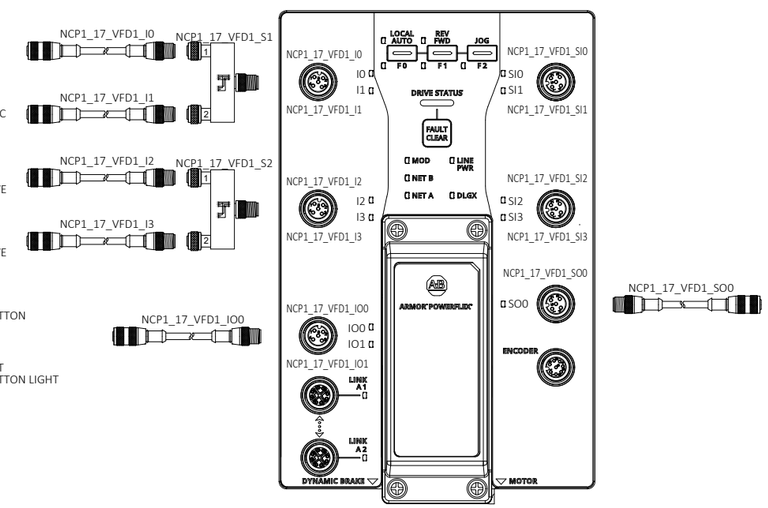

SPARE	
SPARE	
SPARE	
SPARE	
SPARE	
SPARE	
SPARE	
SPARE	
SPARE	
SPARE	
SPARE	
NCP1_16_BCN1_A AMBER BEACON LIGHT	

DRAWING REVISIONS

REV	DESCRIPTION	DATE	BY
00	INITIAL DRAWINGS	04/25/2025	SK
A	AS-BUILT	11/13/2025	LB

autStand
Automation Standard

CONFIDENTIAL: THE INFORMATION CONTAINED HEREIN IS PROPRIETARY INFORMATION OF AUTOMATION STANDARD LLC AND CONSTITUTES TRADE SECRETS PURSUANT TO THE UNIFORM TRADE SECRETS ACT. THIS INFORMATION SHALL ONLY BE USED IN THE PERFORMANCE OF CONTRACT WITH AUTSTAND. THIS INFORMATION SHALL NOT BE USED, REPRODUCED OR EMPLOYED IN WHOLE PART, EXCEPT WITH AUTSTAND's PRIOR WRITTEN APPROVAL.

25K Amazon Cross-Belt Sort Center (ACBSC)
NCP1_14D_VFD1/NCP1_15_VFD1/
NCP1_16_VFD1/NCP1_17_VFD1 IO DRAWINGS

AMAZON MTN6
SPARROWS POINT, MD

FILENAME	
2429-AMZ-MTN6-MCM06-602	
D-SIZE SCALE	JOB NUMBER:
NTS	2429
REVISION	SHEET
A	47

Plotted: 11/21/2025 4:43 PM

NCP1_18A_VFD1

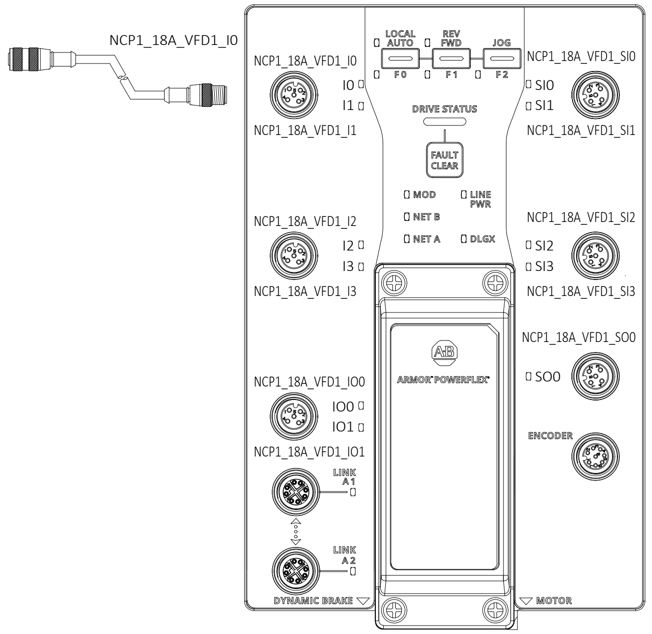

06603.01 NCP1_18A_VFD1_DISC DISCONNECT AUX
06603.02 SPARE
06603.03 SPARE
06603.04 SPARE
06603.05 SPARE
06603.06 SPARE
06603.07
06603.08
06603.09
06603.10

NCP1_18B_VFD1

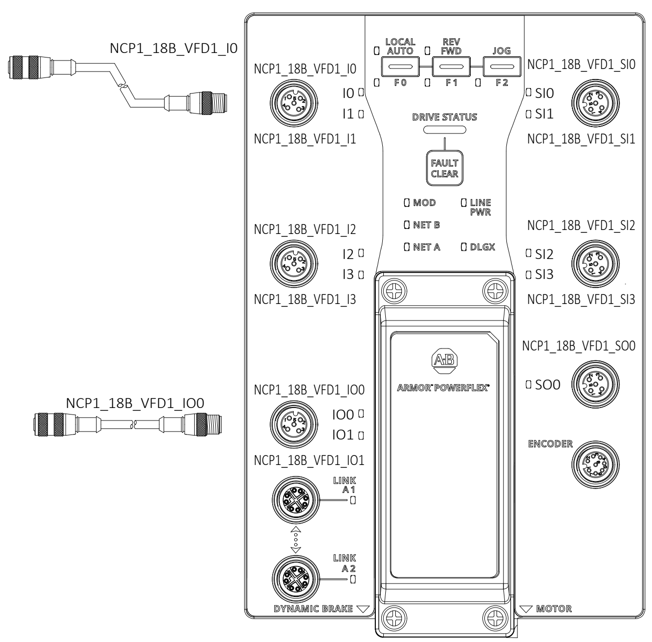

06603.11 NCP1_18B_VFD1_DISC DISCONNECT AUX
06603.12 SPARE
06603.13 SPARE
06603.14 SPARE
06603.15 NCP1_21_S2_PB START PUSHBUTTON
06603.16 NCP1_21_S2_PB_LT START PUSHBUTTON LIGHT
06603.17
06603.18
06603.19
06603.20

SPARE
SPARE
SPARE
SPARE
SPARE

SPARE
SPARE
SPARE
SPARE
SPARE

NCP1_19_VFD1

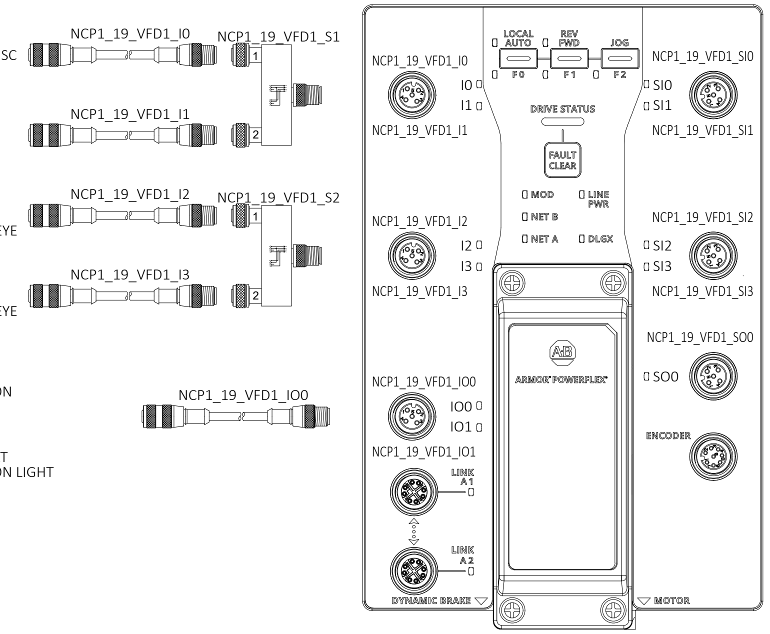

06603.21 NCP1_19_VFD1_DISC DISCONNECT AUX
06603.22 NCP1_19_ENC1 ENCODER
06603.23 NCP1_19_TPE1 TRACKING PHOTOEYE
06603.24 NCP1_19_TPE2 TRACKING PHOTOEYE
06603.25 NCP1_21_S1_PB START PUSHBUTTON
06603.26 NCP1_21_S1_PB_LT START PUSHBUTTON LIGHT
06603.27
06603.28
06603.29
06603.30

SPARE
SPARE
SPARE
SPARE
SPARE

NCP1_20_VFD1

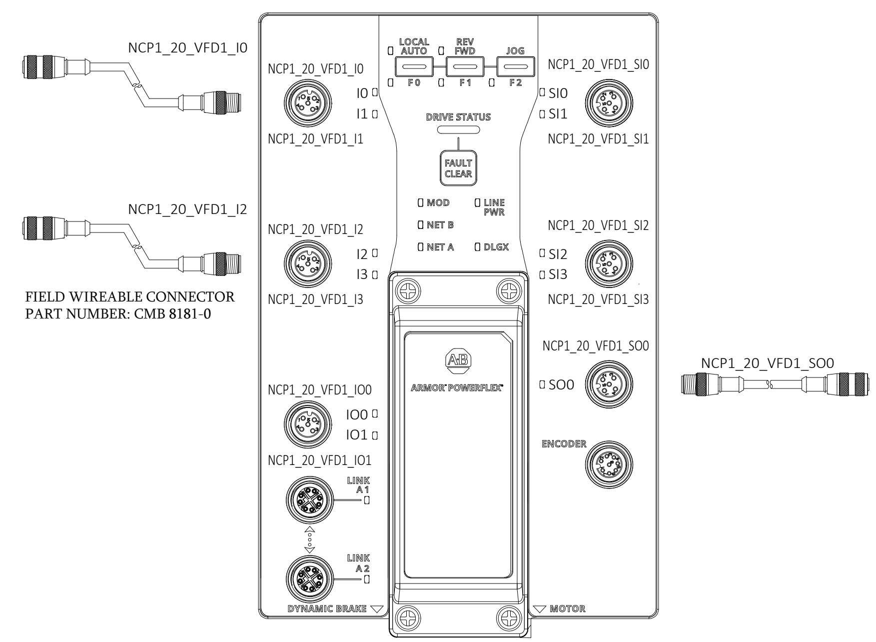

FIELD WIREABLE CONNECTOR
PART NUMBER: CMB 8181-0

06603.31 NCP1_20_VFD1_DISC DISCONNECT AUX
06603.32 SPARE
06603.33 NCP1_20_ENC1 FLOW SPLITTER ENCODER
06603.34 SPARE
06603.35 SPARE
06603.36 SPARE
06603.37
06603.38
06603.39
06603.40

SPARE
SPARE
SPARE
SPARE

NCP1_21_BCN1_R RED BEACON LIGHT

DRAWING REVISIONS

REV	DESCRIPTION	DATE	BY
00	INITIAL DRAWINGS	04/25/2025	SK
A	AS-BUILT	11/13/2025	LB

CONFIDENTIAL: THE INFORMATION CONTAINED HEREIN IS PROPRIETARY INFORMATION OF AUTOMATION STANDARD LLC AND CONSTITUTES TRADE SECRETS PURSUANT TO THE UNIFORM TRADE SECRETS ACT. THIS INFORMATION SHALL ONLY BE USED IN THE PERFORMANCE OF CONTRACT WITH AUTSTAND. THIS INFORMATION SHALL NOT BE USED, REPRODUCED OR EMPLOYED IN WHOLE PART, EXCEPT WITH AUTSTAND's PRIOR WRITTEN APPROVAL.

25K Amazon Cross-Belt Sort Center (ACBSC)
NCP1_18A_VFD1/NCP1_18B_VFD1/
NCP1_19_VFD1/NCP1_20_VFD1 IO DRAWINGS

AMAZON MTN6
SPARROWS POINT, MD

FILENAME	
2429-AMZ-MTN6-MCM06-603	
D-SIZE SCALE	JOB NUMBER:
NTS	2429
REVISION	SHEET
A	48

Plotted: 11/21/2025 4:43 PM

06604.01	NCP1_21_VFD1_DISC DISCONNECT AUX	
06604.02	NCP1_21_ENC1 ENCODER	
06604.03	NCP1_21_TPE1 TRACKING PHOTOEYE	
06604.04	NCP1_21_TPE2 TRACKING PHOTOEYE	
06604.05	NCP1_21_BCN2_R RED BEACON LIGHT	
06604.06	NCP1_21_BCN2_H BEACON HORN	
06604.07		
06604.08		
06604.09		
06604.10		
06604.11	NCP1_9_VFD1_DISC DISCONNECT AUX	
06604.12	SPARE	
06604.13	NCP1_9_TPE1 TRACKING PHOTOEYE	
06604.14	SPARE	
06604.15	NCP1_9_BCN2_R RED BEACON LIGHT	
06604.16	NCP1_9_BCN2_H BEACON HORN	
06604.17		
06604.18		
06604.19		
06604.20		

NCP1_21_VFD1

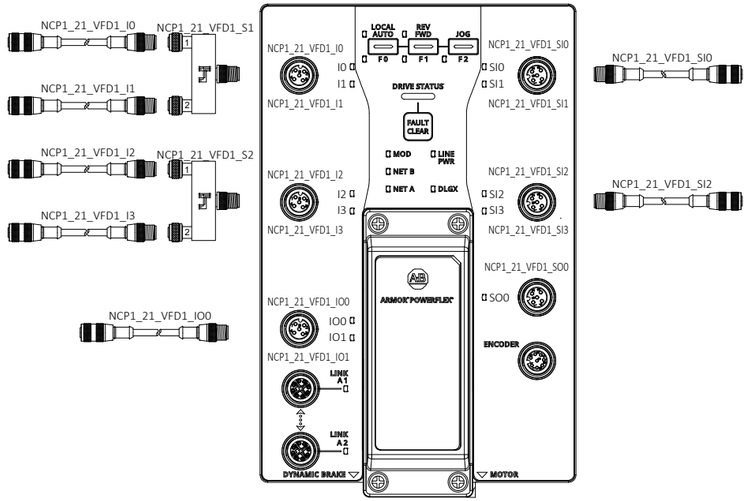

NCP1_21_EPC1 E-STOP PULLCORD	06604.21	NCS2_1_VFD1_DISC DISCONNECT AUX
NCP1_21_EPC1_2 E-STOP PULLCORD	06604.22	SPARE
NCP1_21_EPC2 E-STOP PULLCORD	06604.23	SPARE
NCP1_21_EPC2_2 E-STOP PULLCORD	06604.24	SPARE
SPARE	06604.25	NCS2_2_BCN2_R RED BEACON LIGHT
	06604.26	NCS2_2_BCN2_H BEACON HORN
	06604.27	
	06604.28	
	06604.29	
	06604.30	
NCP1_9_EPC1 E-STOP PULLCORD	06604.31	NCS1_2_VFD1_DISC DISCONNECT AUX
NCP1_9_EPC1_2 E-STOP PULLCORD	06604.32	NCS1_2_ENC1 ENCODER
NCP1_9_EPC2 E-STOP PULLCORD	06604.33	NCS1_2_TPE1 TRACKING PHOTOEYE
NCP1_9_EPC2_2 E-STOP PULLCORD	06604.34	NCS1_1_TPE1 TRACKING PHOTOEYE
NCP1_9_BCN1_R RED BEACON LIGHT	06604.35	NCS1_4_S1_PB START PUSHBUTTON
	06604.36	NCS1_4_S1_PB_LT START PUSHBUTTON LIGHT
	06604.37	
	06604.38	
	06604.39	
	06604.40	

NCS2_1_VFD1

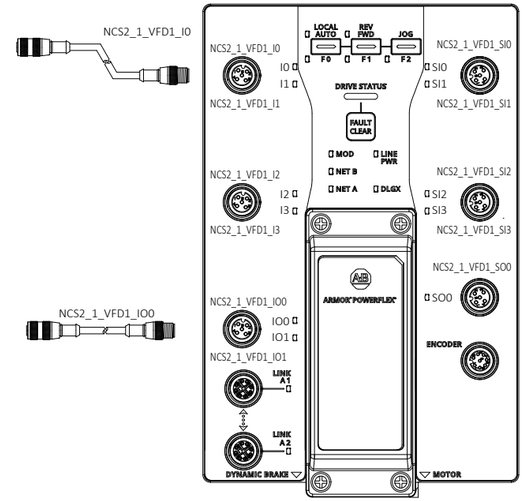

NCS1_2_VFD1

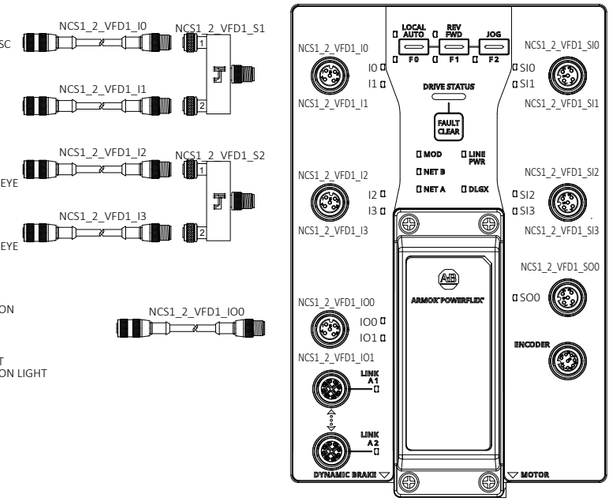

SPARE
SPARE
SPARE
SPARE
SPARE

DRAWING REVISIONS

REV	DESCRIPTION	DATE	BY
00	INITIAL DRAWINGS	04/25/2025	SK
A	AS-BUILT	11/13/2025	LB

autStand
Automation Standard

CONFIDENTIAL: THE INFORMATION CONTAINED HEREIN IS PROPRIETARY INFORMATION OF AUTOMATION STANDARD LLC AND CONSTITUTES TRADE SECRETS PURSUANT TO THE UNIFORM TRADE SECRETS ACT. THIS INFORMATION SHALL ONLY BE USED IN THE PERFORMANCE OF CONTRACT WITH AUTSTAND. THIS INFORMATION SHALL NOT BE USED, REPRODUCED OR EMPLOYED IN WHOLE PART, EXCEPT WITH AUTSTAND'S PRIOR WRITTEN APPROVAL.

25K Amazon Cross-Belt Sort Center (ACBSC)
NCP1_21_VFD1/NCP1_9_VFD1/
NCS2_1_VFD1/NCS1_2_VFD1 IO DRAWINGS

AMAZON MTN6
SPARROWS POINT, MD

FILENAME	
2429-AMZ-MTN6-MCM06-604	
D-SIZE SCALE	JOB NUMBER:
NTS	2429
REVISION	SHEET
A	49

Plotted: 11/21/2025 4:43 PM

06605.01	NCS1_3_VFD1_DISC DISCONNECT AUX	
06605.02	SPARE	
06605.03	NCS1_3_ENC1 ENCODER	
06605.04	SPARE	
06605.05	NCS1_3_JR1_PB JAM RESET PUSHBUTTON	
06605.06	NCS1_3_JR1_PB_LT JAM RESET PUSHBUTTON LIGHT	
06605.07		
06605.08		
06605.09		
06605.10		
06605.11	NCS1_4_VFD1_DISC DISCONNECT AUX	
06605.12	NCS1_4_ENC1 ENCODER	
06605.13	NCS1_4_TPE1 TRACKING PHOTOEYE	
06605.14	NCS1_4_TPE2 TRACKING PHOTOEYE	
06605.15	SPARE	
06605.16	SPARE	
06605.17		
06605.18		
06605.19		
06605.20		

NCS1_3_VFD1

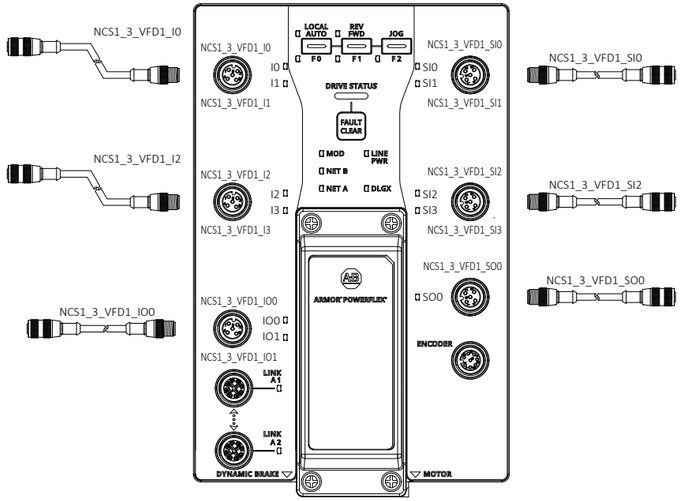

	NCS1_4_EPC3 E-STOP PULLCORD	06605.21 NCS1_5A_VFD1_DISC DISCONNECT AUX
	NCS1_4_EPC3_2 E-STOP PULLCORD	06605.22 SPARE
	NCS1_4_EPC4 E-STOP PULLCORD	06605.23 SPARE
	NCS1_4_EPC4_2 E-STOP PULLCORD	06605.24 SPARE
	NCS1_3_BCN1_A AMBER BEACON LIGHT	06605.25 NCS1_4_BCN1_R RED BEACON LIGHT
		06605.26 NCS1_4_BCN1_H BEACON HORN
		06605.27
		06605.28
		06605.29
		06605.30
	NCS1_4_EPC1 E-STOP PULLCORD	06605.31 NCS1_5B_VFD1_DISC DISCONNECT AUX
	NCS1_4_EPC1_2 E-STOP PULLCORD	06605.32 SPARE
	NCS1_4_EPC2 E-STOP PULLCORD	06605.33 SPARE
	NCS1_4_EPC2_2 E-STOP PULLCORD	06605.34 SPARE
	SPARE	06605.35 NCS1_4_S2_PB START PUSHBUTTON
		06605.36 NCS1_4_S2_PB_LT START PUSHBUTTON LIGHT
		06605.37
		06605.38
		06605.39
		06605.40

NCS1_5A_VFD1

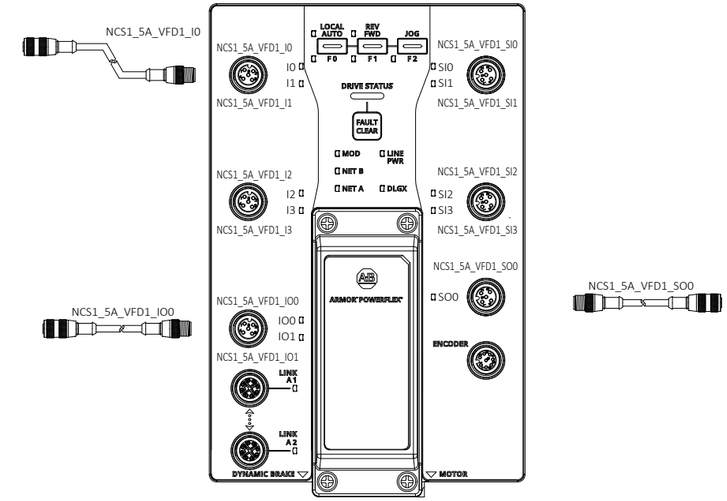

		SPARE
		SPARE
		SPARE
		SPARE
		NCS1_4_BCN2_R RED BEACON LIGHT
		SPARE
		SPARE
		SPARE
		SPARE
		SPARE

NCS1_4_VFD1

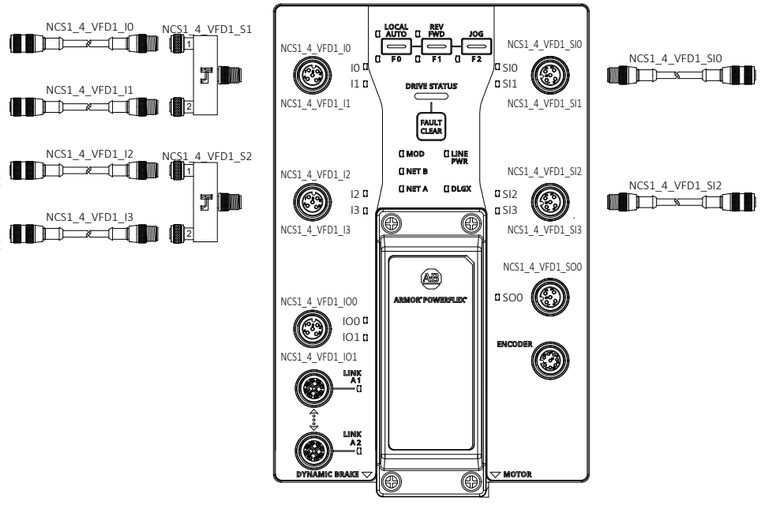

NCS1_5B_VFD1

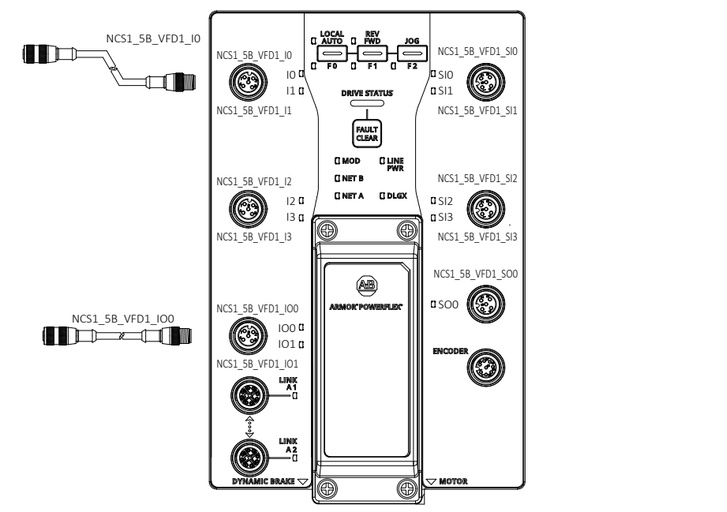

DRAWING REVISIONS

REV	DESCRIPTION	DATE	BY
00	INITIAL DRAWINGS	04/25/2025	SK
A	AS-BUILT	11/13/2025	LB

autStand
Automation Standard

CONFIDENTIAL: THE INFORMATION CONTAINED HEREIN IS PROPRIETARY INFORMATION OF AUTOMATION STANDARD LLC AND CONSTITUTES TRADE SECRETS PURSUANT TO THE UNIFORM TRADE SECRETS ACT. THIS INFORMATION SHALL ONLY BE USED IN THE PERFORMANCE OF CONTRACT WITH AUTSTAND. THIS INFORMATION SHALL NOT BE USED, REPRODUCED OR EMPLOYED IN WHOLE PART, EXCEPT WITH AUTSTAND's PRIOR WRITTEN APPROVAL.

25K Amazon Cross-Belt Sort Center (ACBSC)
NCS1_3_VFD1/NCS1_4_VFD1/
NCS1_5A_VFD1/NCS1_5B_VFD1 IO DRAWINGS

AMAZON MTN6
SPARROWS POINT, MD

FILENAME	
2429-AMZ-MTN6-MCM06-605	
D-SIZE SCALE	JOB NUMBER:
NTS	2429
REVISION	SHEET
A	50

Plotted: 11/21/2025 4:43 PM

NCS1_6_VFD1

06606.01	NCS1_6_VFD1_DISC DISCONNECT AUX	NCS1_6_VFD1_I0 / NCS1_6_VFD1_S1
06606.02	NCS1_6_ENC1 ENCODER	NCS1_6_VFD1_I1
06606.03	NCS1_6_TPE1 TRACKING PHOTOEYE	NCS1_6_VFD1_I2 / NCS1_6_VFD1_S2
06606.04	NCS1_6_TPE2 TRACKING PHOTOEYE	NCS1_6_VFD1_I3
06606.05	S02_1_S2_PB START PUSHBUTTON	NCS1_6_VFD1_IO
06606.06	S02_1_S2_PB_LT START PUSHBUTTON LIGHT	
06606.07		
06606.08		
06606.09		
06606.10		

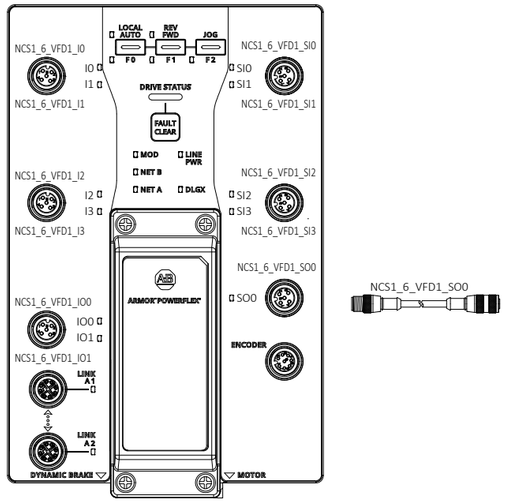

NCS1_6_VFD1_SO0

NCS1_7_VFD1

06606.11	NCS1_7_VFD1_DISC DISCONNECT AUX	NCS1_7_VFD1_I0 / NCS1_7_VFD1_S1
06606.12	NCS1_7_ENC1 ENCODER	NCS1_7_VFD1_I1
06606.13	NCS1_7_TPE1 TRACKING PHOTOEYE	NCS1_7_VFD1_I2
06606.14	SPARE	
06606.15	S02_1_S1_PB START PUSHBUTTON	NCS1_7_VFD1_IO
06606.16	S02_1_S1_PB_LT START PUSHBUTTON LIGHT	
06606.17		
06606.18		
06606.19		
06606.20		

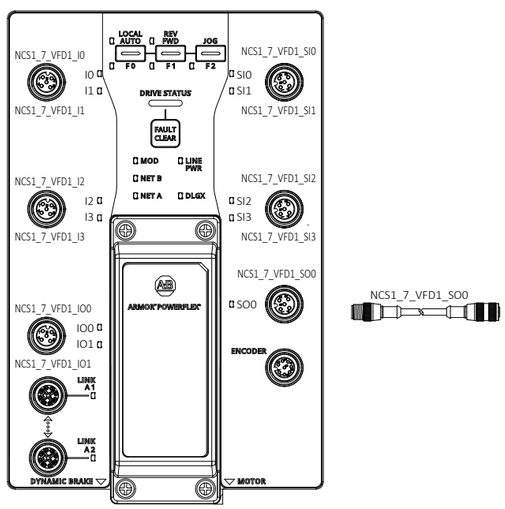

NCS1_7_VFD1_SO0

SPARE	06606.21	NCS1_8_VFD1_DISC DISCONNECT AUX
SPARE	06606.22	NCS1_8_ENC1 ENCODER
SPARE	06606.23	NCS1_8_TPE1 TRACKING PHOTOEYE
SPARE	06606.24	S02_1_ENC1 ENCODER
S02_1_BCN2_R RED BEACON LIGHT	06606.25	S02_1_TS1 TRASH SENSOR
	06606.26	S02_1_TS1 SENDER
	06606.27	
	06606.28	
	06606.29	
	06606.30	

NCS1_8_VFD1

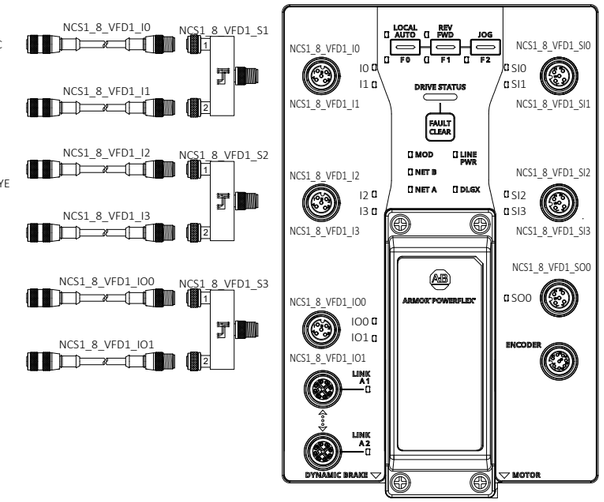

SPARE	06606.31	NCS1_9_VFD1_DISC DISCONNECT AUX
SPARE	06606.32	NCS1_9_ENC1 ENCODER
SPARE	06606.33	NCS1_9_TPE1 TRACKING PHOTOEYE
SPARE	06606.34	S02_1_PE3 ENTRANCE PE
S02_1_BCN1_R RED BEACON LIGHT	06606.35	S02_1_BDS1 BELT DISPLACEMENT SENSOR
	06606.36	S02_1_BDS1 SENDER
	06606.37	
	06606.38	
	06606.39	
	06606.40	

NCS1_9_VFD1

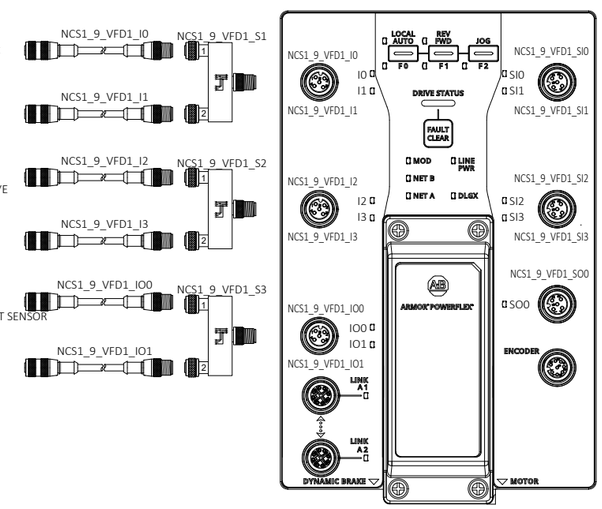

SPARE	
SPARE	
SPARE	
SPARE	
SPARE	
SPARE	
SPARE	
SPARE	
SPARE	
SPARE	
SPARE	
SPARE	
SPARE	
SPARE	
SPARE	
SPARE	
SPARE	
SPARE	
SPARE	

DRAWING REVISIONS			
REV	DESCRIPTION	DATE	BY
00	INITIAL DRAWINGS	04/25/2025	SK
A	AS-BUILT	11/13/2025	LB

autStand Automation Standard

CONFIDENTIAL: THE INFORMATION CONTAINED HEREIN IS PROPRIETARY INFORMATION OF AUTOMATION STANDARD LLC AND CONSTITUTES TRADE SECRETS PURSUANT TO THE UNIFORM TRADE SECRETS ACT. THIS INFORMATION SHALL ONLY BE USED IN THE PERFORMANCE OF CONTRACT WITH AUTSTAND. THIS INFORMATION SHALL NOT BE USED, REPRODUCED OR EMPLOYED IN WHOLE PART, EXCEPT WITH AUTSTAND's PRIOR WRITTEN APPROVAL.

25K Amazon Cross-Belt Sort Center (ACBSC)
NCS1_6_VFD1/NCS1_7_VFD1/
NCS1_8_VFD1/NCS1_9_VFD1 IO DRAWINGS

AMAZON MTN6
SPARROWS POINT, MD

FILENAME	
2429-AMZ-MTN6-MCM06-606	
D-SIZE SCALE	JOB NUMBER:
NTS	2429
REVISION	SHEET
A	51

Plotted: 11/21/2025 4:43 PM

NCS2_2_VFD1

06607.01	NCS2_2_VFD1_DISC DISCONNECT AUX	NCS2_2_VFD1_I0 / NCS2_2_VFD1_S1
06607.02	NCS2_2_ENC1 ENCODER	NCS2_2_VFD1_I1
06607.03	NCS2_2_TPE1 TRACKING PHOTOEYE	NCS2_2_VFD1_I2 / NCS2_2_VFD1_S2
06607.04	NCS2_2_TPE2 TRACKING PHOTOEYE	NCS2_2_VFD1_I3
06607.05	NCS2_2_S1_PB START PUSHBUTTON	NCS2_2_VFD1_IO0
06607.06	NCS2_2_S1_PB_LT START PUSHBUTTON LIGHT	
06607.07		
06607.08		
06607.09		
06607.10		
06607.11	NCS2_3A_VFD1_DISC DISCONNECT AUX	NCS2_3A_VFD1_I0
06607.12	SPARE	
06607.13	SPARE	
06607.14	SPARE	
06607.15	NCS2_2_S2_PB START PUSHBUTTON	NCS2_3A_VFD1_IO0
06607.16	NCS2_2_S2_PB_LT START PUSHBUTTON LIGHT	
06607.17		
06607.18		
06607.19		
06607.20		

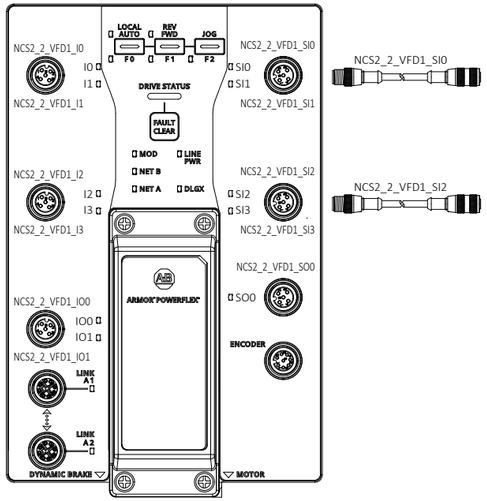

NCS2_3A_VFD1

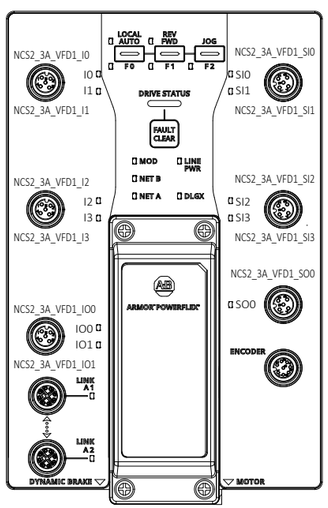

NCS2_2_EPC1 E-STOP PULLCORD	06607.21	NCS2_3B_VFD1_DISC DISCONNECT AUX
NCS2_2_EPC1_2 E-STOP PULLCORD	06607.22	SPARE
NCS2_2_EPC2 E-STOP PULLCORD	06607.23	SPARE
NCS2_2_EPC2_2 E-STOP PULLCORD	06607.24	SPARE
SPARE	06607.25	NCS2_2_BCN1_A AMBER BEACON LIGHT
	06607.26	NCS2_2_BCN1_R RED BEACON LIGHT
	06607.27	
	06607.28	
	06607.29	
	06607.30	
SPARE	06607.31	NCS2_4_VFD1_DISC DISCONNECT AUX
SPARE	06607.32	NCS2_4_ENC1 ENCODER
SPARE	06607.33	NCS2_4_TPE1 TRACKING PHOTOEYE
SPARE	06607.34	NCS2_4_TPE2 TRACKING PHOTOEYE
SPARE	06607.35	S02_2_S2_PB START PUSHBUTTON
	06607.36	S02_2_S2_PB_LT START PUSHBUTTON LIGHT
	06607.37	
	06607.38	
	06607.39	
	06607.40	

NCS2_3B_VFD1

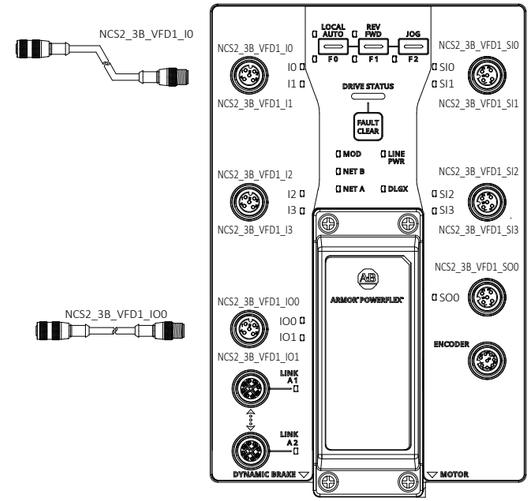

NCS2_4_VFD1

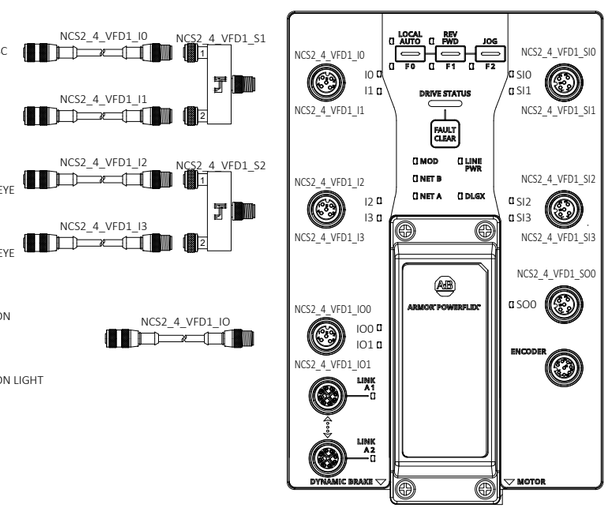

SPARE	
SPARE	
SPARE	
SPARE	
	S02_2_BCN2_R RED BEACON LIGHT

DRAWING REVISIONS

REV.	DESCRIPTION	DATE	BY
00	INITIAL DRAWINGS	04/25/2025	SK
A	AS-BUILT	11/13/2025	LB

autStand Automation Standard

CONFIDENTIAL: THE INFORMATION CONTAINED HEREIN IS PROPRIETARY INFORMATION OF AUTOMATION STANDARD LLC AND CONSTITUTES TRADE SECRETS PURSUANT TO THE UNIFORM TRADE SECRETS ACT. THIS INFORMATION SHALL ONLY BE USED IN THE PERFORMANCE OF CONTRACT WITH AUTSTAND. THIS INFORMATION SHALL NOT BE USED, REPRODUCED OR EMPLOYED IN WHOLE PART, EXCEPT WITH AUTSTAND's PRIOR WRITTEN APPROVAL.

25K Amazon Cross-Belt Sort Center (ACBSC)
NCS2_2_VFD1/NCS2_3A_VFD1/
NCS2_3B_VFD1/NCS2_4_VFD1 IO DRAWINGS

AMAZON MTN6
SPARROWS POINT, MD

FILENAME	
2429-AMZ-MTN6-MCM06-607	
D-SIZE SCALE	JOB NUMBER:
NTS	2429
REVISION	SHEET
A	52

Plotted: 11/21/2025 4:43 PM

NCS2_5_VFD1

06608.01	NCS2_5_VFD1_DISC DISCONNECT AUX	NCS2_5_VFD1_I0 / NCS2_5_VFD1_S1
06608.02	NCS2_5_ENC1 ENCODER	NCS2_5_VFD1_I1
06608.03	NCS2_5_TPE1 TRACKING PHOTOEYE	NCS2_5_VFD1_I2
06608.04	SPARE	
06608.05	S02_2_S1_PB START PUSHBUTTON	NCS2_5_VFD1_IO
06608.06	S02_2_S1_PB_LT START PUSHBUTTON LIGHT	
06608.07		
06608.08		
06608.09		
06608.10		
06608.11	NCS2_6_VFD1_DISC DISCONNECT AUX	NCS2_6_VFD1_I0 / NCS2_6_VFD1_S1
06608.12	NCS2_6_ENC1 ENCODER	NCS2_6_VFD1_I1
06608.13	NCS2_6_TPE1 TRACKING PHOTOEYE	NCS2_6_VFD1_I2 / NCS2_6_VFD1_S2
06608.14	S02_2_ENC1 ENCODER	NCS2_6_VFD1_I3
06608.15	S02_2_TS1 TRASH SENSOR	NCS2_6_VFD1_IO0 / NCS2_6_VFD1_S3
06608.16	S02_2_TS1 SENDER	NCS2_6_VFD1_IO1
06608.17		
06608.18		
06608.19		
06608.20		

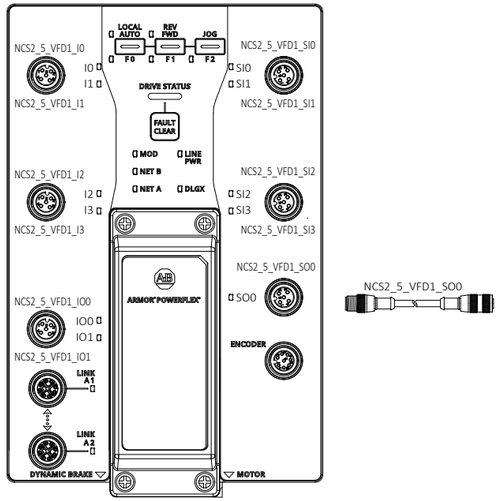

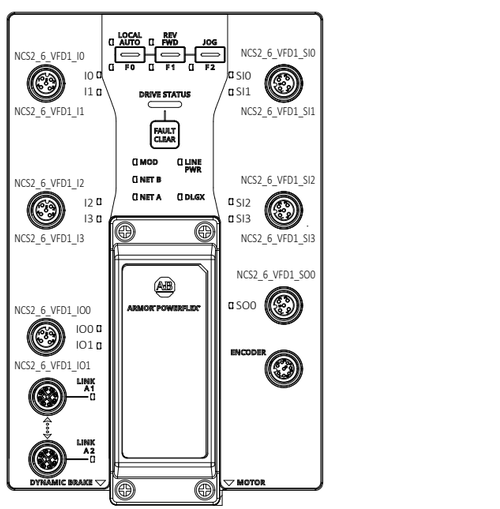

NCS2_5_VFD1_SO0

NCS2_7_VFD1

SPARE	06608.21	NCS2_7_VFD1_DISC DISCONNECT AUX
SPARE	06608.22	NCS2_7_ENC1 ENCODER
SPARE	06608.23	NCS2_7_TPE1 TRACKING PHOTOEYE
SPARE	06608.24	S02_2_PE3 ENTRANCE PE
S02_2_BCN1_R RED BEACON LIGHT	06608.25	S02_2_BDS1 BELT DISPLACEMENT SENSOR
	06608.26	S02_2_BDS1 SENDER
	06608.27	
	06608.28	
	06608.29	
	06608.30	
SPARE	06608.31	
SPARE	06608.32	
SPARE	06608.33	
SPARE	06608.34	
SPARE	06608.35	
	06608.36	
	06608.37	
	06608.38	
	06608.39	
	06608.40	

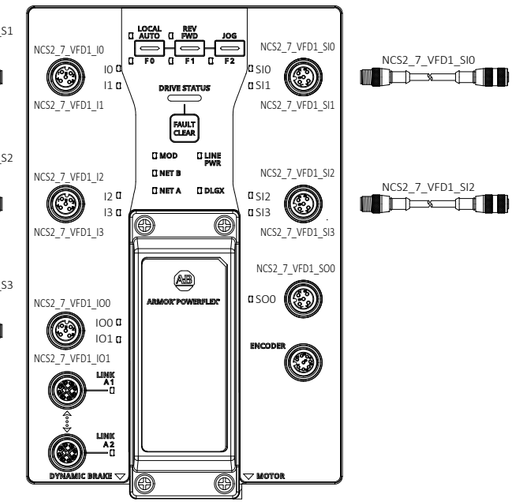

S02_2_EPC1 E-STOP PULLCORD	NCS2_7_VFD1_SI0
S02_2_EPC1_2 E-STOP PULLCORD	
S02_2_EPC2 E-STOP PULLCORD	NCS2_7_VFD1_SI2
S02_2_EPC2_2 E-STOP PULLCORD	
SPARE	

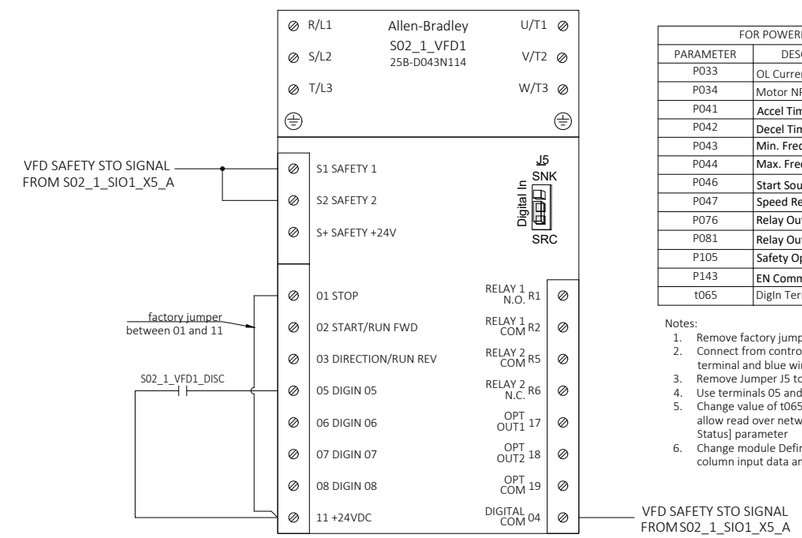

FOR POWERFLEX 525 SERIES, 30 HP		
PARAMETER	DESCRIPTION:	CHANGE VALUE TO:
P033	OL Current 125%	42.5
P034	Motor NP FLA	34
P041	Accel Time 1	2.00 s
P042	Decel Time 1	1.00 s
P043	Min. Freq	15.00 Hz
P044	Max. Freq	75.00 Hz
P046	Start Source 1	5 "Ethernet/IP"
P047	Speed Reference 1	15 "Ethernet/IP"
P076	Relay Out1 Sel	MotorRunning
P081	Relay Out2 Sel	Ready/Fault
P105	Safety Open En	1 "FaultDisable"
P143	EN Comm Fit Actn	1 "Stop"
t065	DigIn TermBlk 05	0 "Not Used"

Notes:
1. Remove factory jumper between terminals S1, S2 and S+
2. Connect from control cable 889D-F4ACDM-** black wire to S1 terminal and blue wire to 04 Digital COM terminal
3. Remove Jumper J5 to enable SNK(Internal supply) mode.
4. Use terminals 05 and 11 for dsiconnect aux contact connection
5. Change value of t065 parameter to 0 "Not Used'. This step will allow read over network communications with b014[Dig In Status] parameter
6. Change module Definition at VFD settings (Logix Designer). Use column input data and where Disabled use 14 Dig In Status

DRAWING REVISIONS

REV	DESCRIPTION	DATE	BY
00	INITIAL DRAWINGS	04/25/2025	SK
A	AS-BUILT	11/13/2025	LB

autStand
Automation Standard

CONFIDENTIAL: THE INFORMATION CONTAINED HEREIN IS PROPRIETARY INFORMATION OF AUTOMATION STANDARD LLC AND CONSTITUTES TRADE SECRETS PURSUANT TO THE UNIFORM TRADE SECRETS ACT. THIS INFORMATION SHALL ONLY BE USED IN THE PERFORMANCE OF CONTRACT WITH AUTSTAND. THIS INFORMATION SHALL NOT BE USED, REPRODUCED OR EMPLOYED IN WHOLE PART, EXCEPT WITH AUTSTAND'S PRIOR WRITTEN APPROVAL.

25K Amazon Cross-Belt Sort Center (ACBSC)
NCS2_5_VFD1/NCS2_6_VFD1/
NCS2_7_VFD1/S02_1_VFD1 IO DRAWINGS

AMAZON MTN6
SPARROWS POINT, MD

FILENAME	
2429-AMZ-MTN6-MCM06-608	
D-SIZE SCALE	JOB NUMBER:
NTS	2429
REVISION	SHEET
A	53

Plotted: 11/21/2025 4:43 PM

06609.01

06609.02

06609.03

06609.04

06609.05

06609.06

06609.07

06609.08

06609.09

06609.10

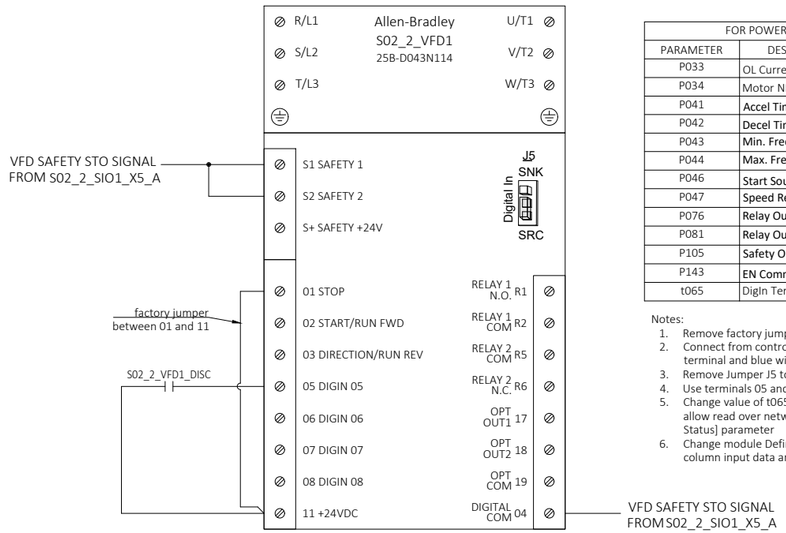

FOR POWERFLEX 525 SERIES, 30 HP		
PARAMETER	DESCRIPTION:	CHANGE VALUE TO:
P033	OL Current 125%	42.5
P034	Motor NP FLA	34
P041	Accel Time 1	2.00 s
P042	Decel Time 1	1.00 s
P043	Min. Freq	15.00 Hz
P044	Max. Freq	75.00 Hz
P046	Start Source 1	5 "Ethernet/IP"
P047	Speed Reference 1	15 "Ethernet/IP"
P076	Relay Out1 Sel	MotorRunning
P081	Relay Out2 Sel	Ready/Fault
P105	Safety Open En	1 "FaultDisable"
P143	EN Comm Fit Actn	1 "Stop"
t065	DigIn TermBlk 05	0 "Not Used"

Notes:
1. Remove factory jumper between terminals S1, S2 and S+
2. Connect from control cable 889D-F4ACDM-** black wire to S1 terminal and blue wire to 04 Digital COM terminal
3. Remove Jumper J5 to enable SNK(Internal supply) mode.
4. Use terminals 05 and 11 for dsiconnect aux contact connection
5. Change value of t065 parameter to 0 "Not Used'. This step will allow read over network communications with b014[Dig In Status] parameter
6. Change module Definition at VFD settings (Logix Designer). Use column input data and where Disabled use 14 Dig In Status

S02_2_SIO1

06609.21 S02_2_TPE1
TRACKING PHOTOEYE

06609.22 SPARE

06609.23 S02_2_BDS2
BELT DISPLACEMENT SENSOR

06609.24 SPARE

06609.25 S02_2_BDS2
SENDER

06609.26 SPARE

06609.27 SPARE

06609.28 SPARE

06609.29

06609.30

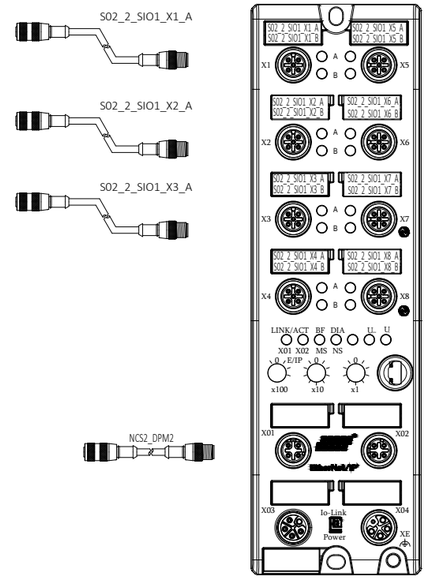

S02_2_VFD1_STO
VFD SAFETY ACTIVE

SPARE

NCPRS2_2_STO1
ESTOP OK

SPARE

S02_2_BCN1_A
AMBER BEACON LIGHT

S02_2_BCN1_B
BLUE BEACON LIGHT

S02_2_BCN1_H
BEACON HORN

S02_2CH_JPE1
JAM PHOTOEYE

S02_1_SIO1

06609.11 S02_1_TPE1
TRACKING PHOTOEYE

06609.12 SPARE

06609.13 S02_1_BDS2
BELT DISPLACEMENT SENSOR

06609.14 SPARE

06609.15 S02_1_BDS2
SENDER

06609.16 SPARE

06609.17 SPARE

06609.18 SPARE

06609.19

06609.20

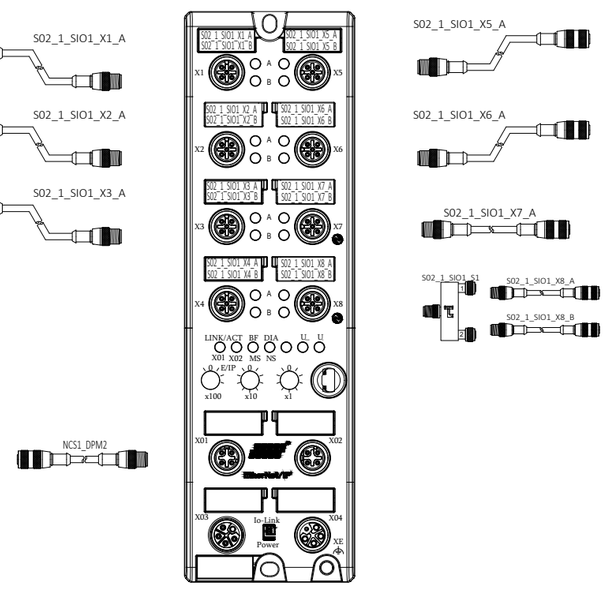

06609.31 S02_1_VFD1_STO
VFD SAFETY ACTIVE

SPARE

06609.32

NCPRS1_2_STO1
ESTOP OK

06609.33 SPARE

S02_1_BCN1_A
AMBER BEACON LIGHT

06609.34 S02_1_BCN1_B
BLUE BEACON LIGHT

S02_1_BCN1_H
BEACON HORN

06609.35 S02_1CH_JPE1
JAM PHOTOEYE

06609.36

06609.37

06609.38

06609.39

06609.40

DRAWING REVISIONS			
REV	DESCRIPTION	DATE	BY
00	INITIAL DRAWINGS	04/25/2025	SK
A	AS-BUILT	11/13/2025	LB

autStand
Automation Standard

CONFIDENTIAL: THE INFORMATION CONTAINED HEREIN IS PROPRIETARY INFORMATION OF AUTOMATION STANDARD LLC AND CONSTITUTES TRADE SECRETS PURSUANT TO THE UNIFORM TRADE SECRETS ACT. THIS INFORMATION SHALL ONLY BE USED IN THE PERFORMANCE OF CONTRACT WITH AUTSTAND. THIS INFORMATION SHALL NOT BE USED, REPRODUCED OR EMPLOYED IN WHOLE PART, EXCEPT WITH AUTSTAND's PRIOR WRITTEN APPROVAL.

25K Amazon Cross-Belt Sort Center (ACBSC)
S02_2_VFD1/S02_2_SIO1/
S02_1_SIO1 IO DRAWINGS

AMAZON MTN6
SPARROWS POINT, MD

FILENAME	
2429-AMZ-MTN6-MCM06-609	
D-SIZE SCALE	JOB NUMBER:
NTS	2429
REVISION	SHEET
A	54

Plotted: 11/21/2025 4:43 PM

S02_1_FIO9

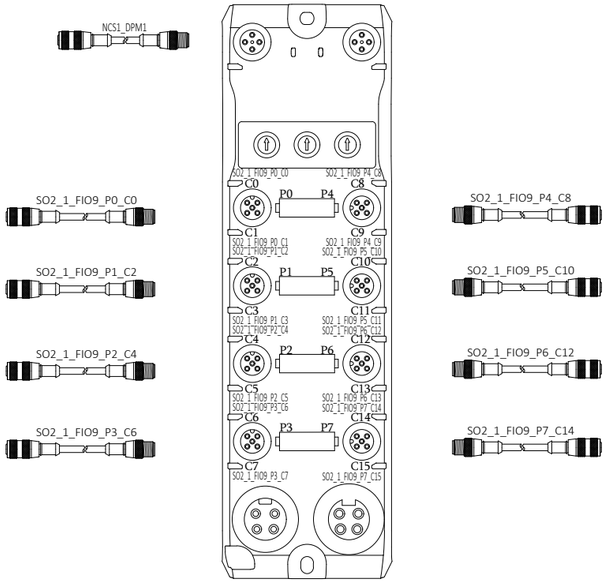

06610.01	S02_1_SOL1 DIVERT MODULE	06610.21	S02_1_SOL17 DIVERT MODULE
06610.02	SPARE	06610.22	SPARE
06610.03	S02_1_SOL2 DIVERT MODULE	06610.23	S02_1_SOL18 DIVERT MODULE
06610.04	SPARE	06610.24	SPARE
06610.05	S02_1_SOL3 DIVERT MODULE	06610.25	S02_1_SOL19 DIVERT MODULE
06610.06	SPARE	06610.26	SPARE
06610.07	S02_1_SOL4 DIVERT MODULE	06610.27	S02_1_SOL20 DIVERT MODULE
06610.08	SPARE	06610.28	SPARE
06610.09		06610.29	
06610.10		06610.30	

S02_1_FIO11

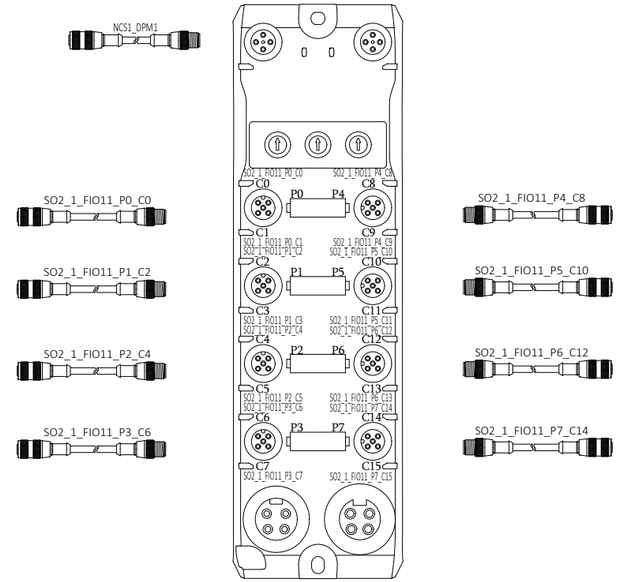

S02_1_SOL5 DIVERT MODULE	S02_1_SOL21 DIVERT MODULE		
SPARE	SPARE		
S02_1_SOL6 DIVERT MODULE	S02_1_SOL22 DIVERT MODULE		
SPARE	SPARE		
S02_1_SOL7 DIVERT MODULE	S02_1_SOL23 DIVERT MODULE		
SPARE	SPARE		
S02_1_SOL8 DIVERT MODULE	S02_1_SOL24 DIVERT MODULE		
SPARE	SPARE		

S02_1_FIO10

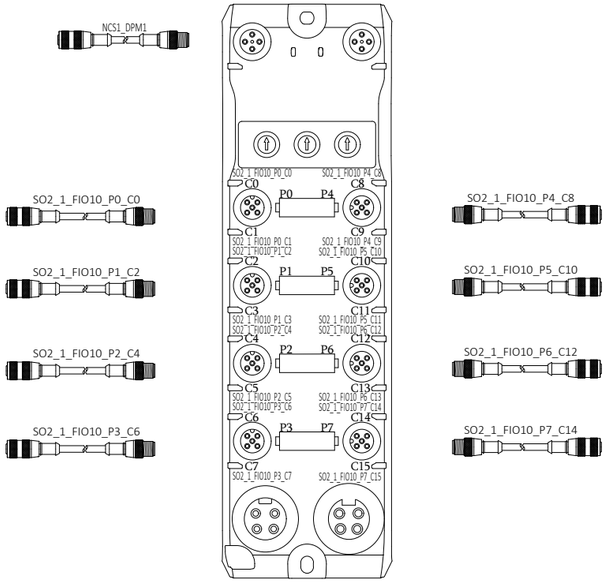

06610.11	S02_1_SOL9 DIVERT MODULE	06610.31	S02_1_SOL25 DIVERT MODULE
06610.12	SPARE	06610.32	SPARE
06610.13	S02_1_SOL10 DIVERT MODULE	06610.33	S02_1_SOL26 DIVERT MODULE
06610.14	SPARE	06610.34	SPARE
06610.15	S02_1_SOL11 DIVERT MODULE	06610.35	S02_1_SOL27 DIVERT MODULE
06610.16	SPARE	06610.36	SPARE
06610.17	S02_1_SOL12 DIVERT MODULE	06610.37	S02_1_SOL28 DIVERT MODULE
06610.18	SPARE	06610.38	SPARE
06610.19		06610.39	
06610.20		06610.40	

S02_1_FIO12

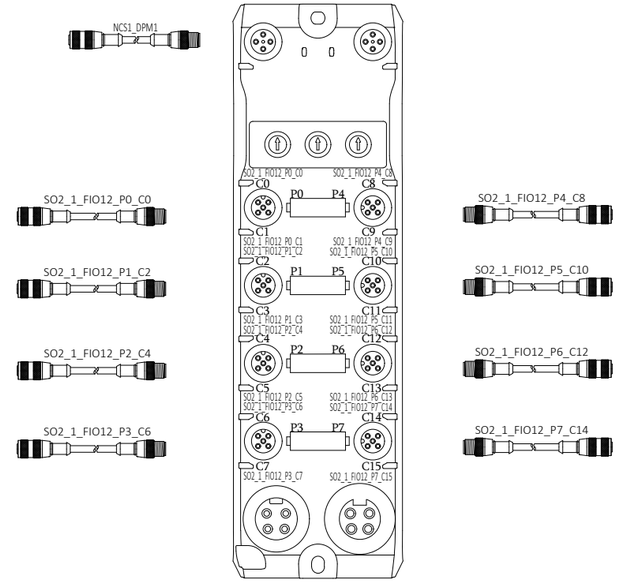

S02_1_SOL13 DIVERT MODULE	S02_1_SOL29 DIVERT MODULE		
SPARE	SPARE		
S02_1_SOL14 DIVERT MODULE	S02_1_SOL30 DIVERT MODULE		
SPARE	SPARE		
S02_1_SOL15 DIVERT MODULE	S02_1_SOL31 DIVERT MODULE		
SPARE	SPARE		
S02_1_SOL16 DIVERT MODULE	S02_1_SOL32 DIVERT MODULE		
SPARE	SPARE		

DRAWING REVISIONS

REV.	DESCRIPTION	DATE	BY
00	INITIAL DRAWINGS	04/25/2025	SK
A	AS-BUILT	11/13/2025	LB

autStand
Automation Standard

CONFIDENTIAL: THE INFORMATION CONTAINED HEREIN IS PROPRIETARY INFORMATION OF AUTOMATION STANDARD LLC AND CONSTITUTES TRADE SECRETS PURSUANT TO THE UNIFORM TRADE SECRETS ACT. THIS INFORMATION SHALL ONLY BE USED IN THE PERFORMANCE OF CONTRACT WITH AUTSTAND. THIS INFORMATION SHALL NOT BE USED, REPRODUCED OR EMPLOYED IN WHOLE PART, EXCEPT WITH AUTSTAND's PRIOR WRITTEN APPROVAL.

25K Amazon Cross-Belt Sort Center (ACBSC)
S02_1_FIO9/S02_1_FIO10/
S02_1_FIO11/S02_1_FIO12 IO DRAWINGS

AMAZON MTN6
SPARROWS POINT, MD

FILENAME	
2429-AMZ-MTN6-MCM06-610	
D-SIZE SCALE	JOB NUMBER:
NTS	2429
REVISION	SHEET
A	55

Plotted: 11/21/2025 4:43 PM

S02_1_FIO13

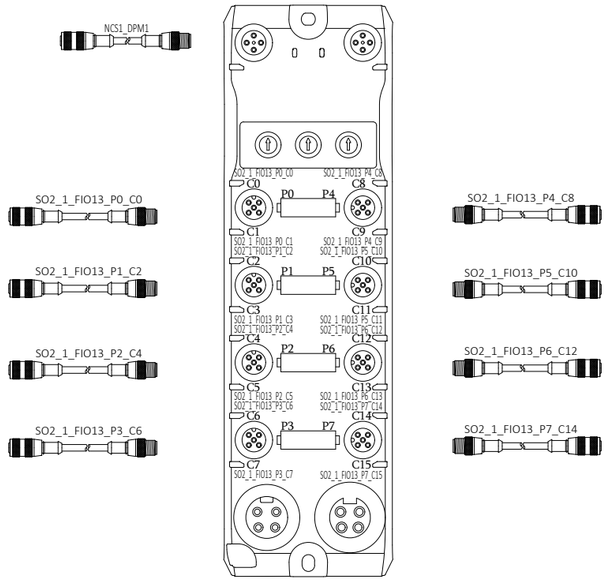

06611.01	SO2_1_SOL33 DIVERT MODULE	06611.21	SO2_1_SOL49 DIVERT MODULE
06611.02	SPARE	06611.22	SPARE
06611.03	SO2_1_SOL34 DIVERT MODULE	06611.23	SO2_1_SOL50 DIVERT MODULE
06611.04	SPARE	06611.24	SPARE
06611.05	SO2_1_SOL35 DIVERT MODULE	06611.25	SO2_1_SOL51 DIVERT MODULE
06611.06	SPARE	06611.26	SPARE
06611.07	SO2_1_SOL36 DIVERT MODULE	06611.27	SO2_1_SOL52 DIVERT MODULE
06611.08	SPARE	06611.28	SPARE
06611.09		06611.29	
06611.10		06611.30	

S02_1_FIO15

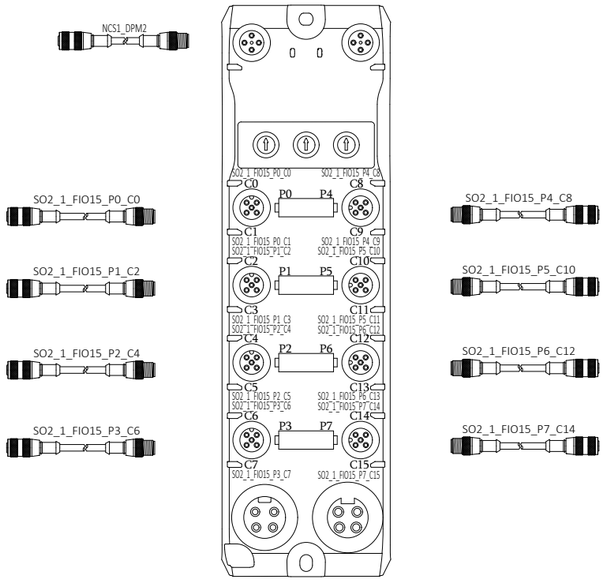

SO2_1_SOL37 DIVERT MODULE	SO2_1_SOL53 DIVERT MODULE	SPARE	SPARE
SPARE	SPARE	SO2_1_SOL38 DIVERT MODULE	SO2_1_SOL54 DIVERT MODULE
SPARE	SPARE	SO2_1_SOL39 DIVERT MODULE	SO2_1_SOL55 DIVERT MODULE
SPARE	SPARE	SO2_1_SOL40 DIVERT MODULE	SO2_1_SOL56 DIVERT MODULE
SPARE	SPARE		

S02_1_FIO14

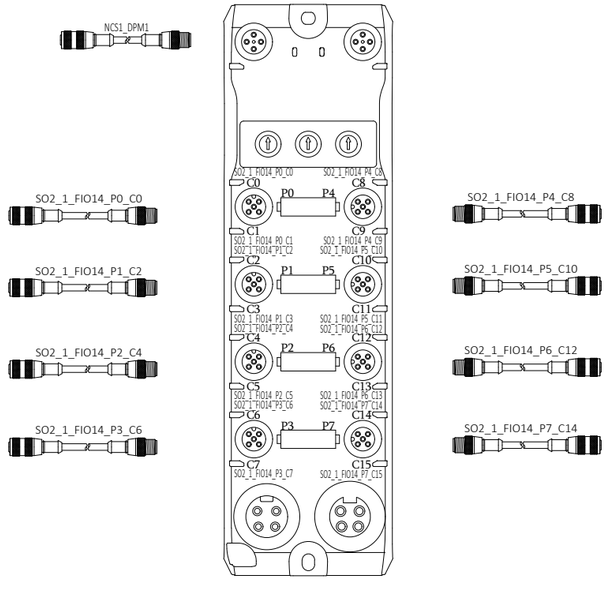

06611.11	SO2_1_SOL41 DIVERT MODULE	06611.31	SO2_1_SOL57 DIVERT MODULE
06611.12	SPARE	06611.32	SPARE
06611.13	SO2_1_SOL42 DIVERT MODULE	06611.33	SO2_1_SOL58 DIVERT MODULE
06611.14	SPARE	06611.34	SPARE
06611.15	SO2_1_SOL43 DIVERT MODULE	06611.35	SO2_1_SOL59 DIVERT MODULE
06611.16	SPARE	06611.36	SPARE
06611.17	SO2_1_SOL44 DIVERT MODULE	06611.37	SO2_1_SOL60 DIVERT MODULE
06611.18	SPARE	06611.38	SPARE
06611.19		06611.39	
06611.20		06611.40	

S02_1_FIO16

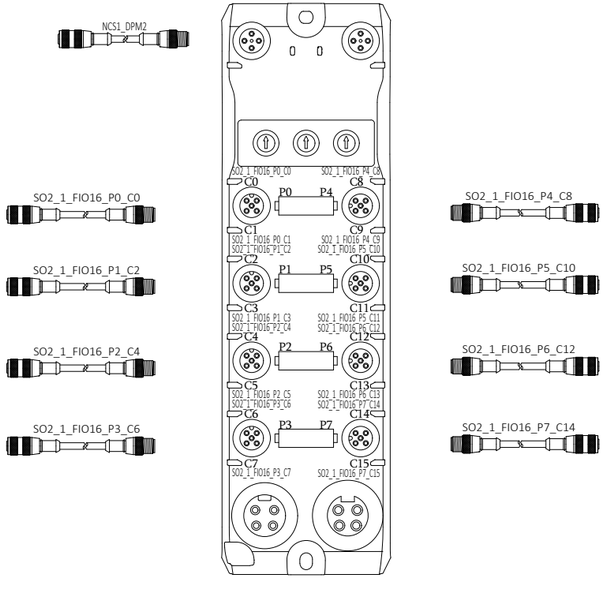

SO2_1_SOL45 DIVERT MODULE	SO2_1_SOL61 DIVERT MODULE	SPARE	SPARE
SPARE	SPARE	SO2_1_SOL46 DIVERT MODULE	SO2_1_SOL62 DIVERT MODULE
SPARE	SPARE	SO2_1_SOL47 DIVERT MODULE	SO2_1_SOL63 DIVERT MODULE
SPARE	SPARE	SO2_1_SOL48 DIVERT MODULE	SO2_1_SOL64 DIVERT MODULE
SPARE	SPARE		

DRAWING REVISIONS

REV	DESCRIPTION	DATE	BY
00	INITIAL DRAWINGS	04/25/2025	SK
A	AS-BUILT	11/13/2025	LB

autStand
Automation Standard

CONFIDENTIAL: THE INFORMATION CONTAINED HEREIN IS PROPRIETARY INFORMATION OF AUTOMATION STANDARD LLC AND CONSTITUTES TRADE SECRETS PURSUANT TO THE UNIFORM TRADE SECRETS ACT. THIS INFORMATION SHALL ONLY BE USED IN THE PERFORMANCE OF CONTRACT WITH AUTSTAND. THIS INFORMATION SHALL NOT BE USED, REPRODUCED OR EMPLOYED IN WHOLE PART, EXCEPT WITH AUTSTAND's PRIOR WRITTEN APPROVAL.

25K Amazon Cross-Belt Sort Center (ACBSC)
S02_1_FIO13/S02_1_FIO14/
S02_1_FIO15/S02_1_FIO16 IO DRAWINGS

AMAZON MTN6
SPARROWS POINT, MD

FILENAME	
2429-AMZ-MTN6-MCM06-611	
D-SIZE SCALE	JOB NUMBER:
NTS	2429
REVISION	SHEET
A	56

Plotted: 11/21/2025 4:43 PM

S02_1_FIO17

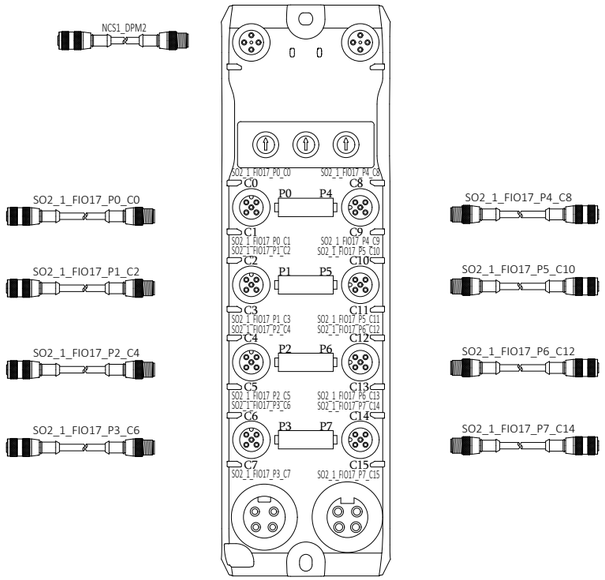

06612.01	SO2_1_SOL65 DIVERT MODULE
06612.02	SPARE
06612.03	SO2_1_SOL66 DIVERT MODULE
06612.04	SPARE
06612.05	SO2_1_SOL67 DIVERT MODULE
06612.06	SPARE
06612.07	SO2_1_SOL68 DIVERT MODULE
06612.08	SPARE
06612.09	
06612.10	

S02_1_FIO19

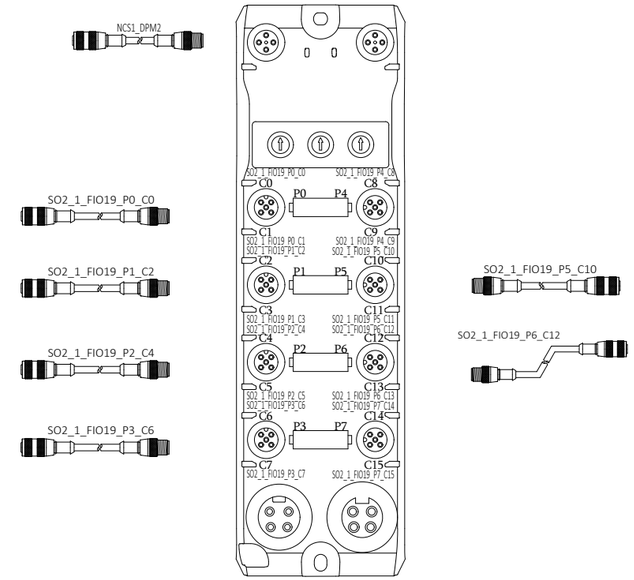

SO2_1_SOL69 DIVERT MODULE	06612.21	SO2_1_SOL81 DIVERT MODULE
SPARE	06612.22	SPARE
SO2_1_SOL70 DIVERT MODULE	06612.23	SO2_1_SOL82 DIVERT MODULE
SPARE	06612.24	SPARE
SO2_1_SOL71 DIVERT MODULE	06612.25	SO2_1_SOL83 DIVERT MODULE
SPARE	06612.26	SPARE
SO2_1_SOL72 DIVERT MODULE	06612.27	SO2_1_SOL84 DIVERT MODULE
SPARE	06612.28	SPARE
	06612.29	
	06612.30	

SPARE	
SPARE	
SO2_1_S4_PB START PUSHBUTTON	
SO2_1_S4_PB_LT START PUSHBUTTON LIGHT	
NCPRS1_2_MDR_Run MDR RUN SIGNAL	
SPARE	
SPARE	
SPARE	

S02_1_FIO18

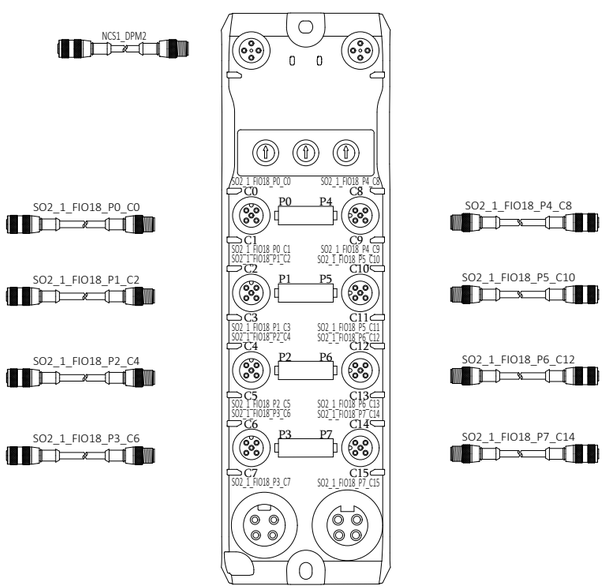

06612.11	SO2_1_SOL73 DIVERT MODULE
06612.12	SPARE
06612.13	SO2_1_SOL74 DIVERT MODULE
06612.14	SPARE
06612.15	SO2_1_SOL75 DIVERT MODULE
06612.16	SPARE
06612.17	SO2_1_SOL76 DIVERT MODULE
06612.18	SPARE
06612.19	
06612.20	

SO2_1_SOL77 DIVERT MODULE	06612.31
SPARE	06612.32
SO2_1_SOL78 DIVERT MODULE	06612.33
SPARE	06612.34
SO2_1_SOL79 DIVERT MODULE	06612.35
SPARE	06612.36
SO2_1_SOL80 DIVERT MODULE	06612.37
SPARE	06612.38
	06612.39
	06612.40

DRAWING REVISIONS

REV	DESCRIPTION	DATE	BY
00	INITIAL DRAWINGS	04/25/2025	SK
A	AS-BUILT	11/13/2025	LB

autStand Automation Standard

CONFIDENTIAL: THE INFORMATION CONTAINED HEREIN IS PROPRIETARY INFORMATION OF AUTOMATION STANDARD LLC AND CONSTITUTES TRADE SECRETS PURSUANT TO THE UNIFORM TRADE SECRETS ACT. THIS INFORMATION SHALL ONLY BE USED IN THE PERFORMANCE OF CONTRACT WITH AUTSTAND. THIS INFORMATION SHALL NOT BE USED, REPRODUCED OR EMPLOYED IN WHOLE PART, EXCEPT WITH AUTSTAND'S PRIOR WRITTEN APPROVAL.

25K Amazon Cross-Belt Sort Center (ACBSC)
S02_1_FIO17/S02_1_FIO18
S02_1_FIO13 IO DRAWINGS

AMAZON MTN6
SPARROWS POINT, MD

FILENAME	2429-AMZ-MTN6-MCM06-612
D-SIZE SCALE	NTS
JOB NUMBER:	2429
REVISION	A
SHEET	57

S02_2_FIO9

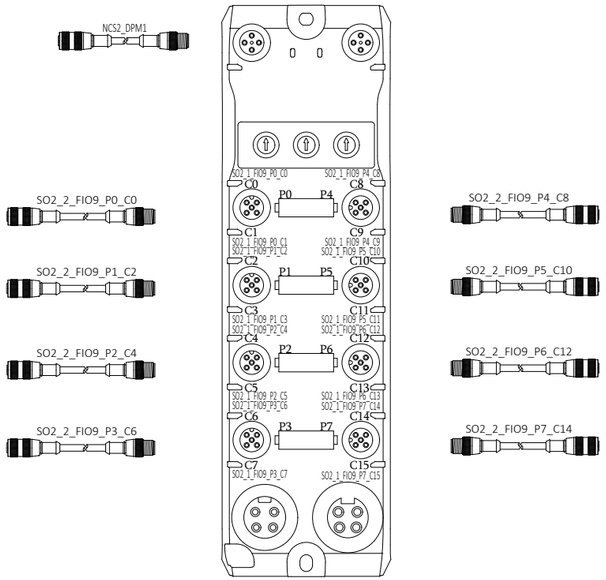

06613.01 S02_2_SOL1 DIVERT MODULE
06613.02 SPARE
06613.03 S02_2_SOL2 DIVERT MODULE
06613.04 SPARE
06613.05 S02_2_SOL3 DIVERT MODULE
06613.06 SPARE
06613.07 S02_2_SOL4 DIVERT MODULE
06613.08 SPARE
06613.09
06613.10

S02_2_FIO11

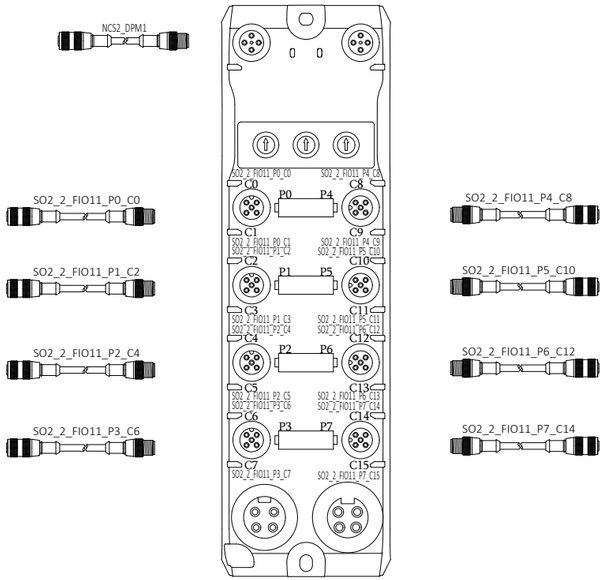

S02_2_SOL5 DIVERT MODULE
SPARE
S02_2_SOL6 DIVERT MODULE
SPARE
S02_2_SOL7 DIVERT MODULE
SPARE
S02_2_SOL8 DIVERT MODULE
SPARE

06613.21 S02_2_SOL17 DIVERT MODULE
06613.22 SPARE
06613.23 S02_2_SOL18 DIVERT MODULE
06613.24 SPARE
06613.25 S02_2_SOL19 DIVERT MODULE
06613.26 SPARE
06613.27 S02_2_SOL20 DIVERT MODULE
06613.28 SPARE
06613.29
06613.30

S02_2_SOL21 DIVERT MODULE
SPARE
S02_2_SOL22 DIVERT MODULE
SPARE
S02_2_SOL23 DIVERT MODULE
SPARE
S02_2_SOL24 DIVERT MODULE
SPARE

S02_2_FIO10

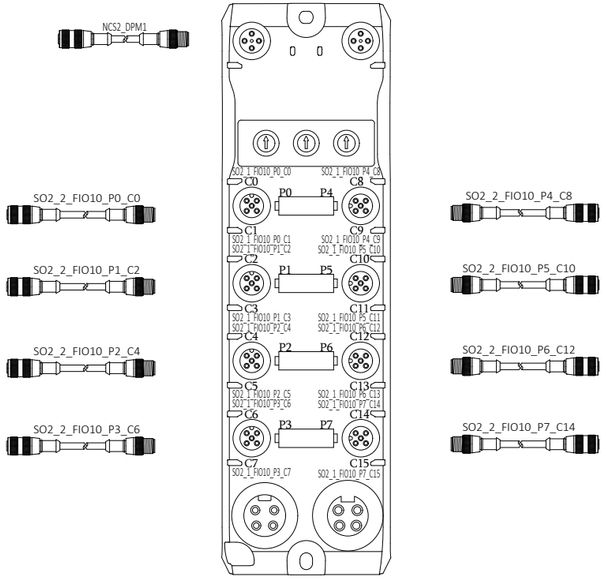

06613.11 S02_2_SOL9 DIVERT MODULE
06613.12 SPARE
06613.13 S02_2_SOL10 DIVERT MODULE
06613.14 SPARE
06613.15 S02_2_SOL11 DIVERT MODULE
06613.16 SPARE
06613.17 S02_2_SOL12 DIVERT MODULE
06613.18 SPARE
06613.19
06613.20

S02_2_FIO12

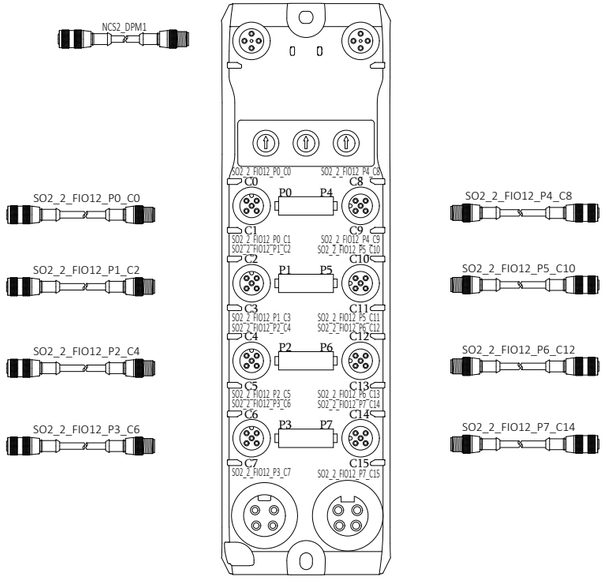

S02_2_SOL13 DIVERT MODULE
SPARE
S02_2_SOL14 DIVERT MODULE
SPARE
S02_2_SOL15 DIVERT MODULE
SPARE
S02_2_SOL16 DIVERT MODULE
SPARE

06613.31 S02_2_SOL25 DIVERT MODULE
06613.32 SPARE
06613.33 S02_2_SOL26 DIVERT MODULE
06613.34 SPARE
06613.35 S02_2_SOL27 DIVERT MODULE
06613.36 SPARE
06613.37 S02_2_SOL28 DIVERT MODULE
06613.38 SPARE
06613.39
06613.40

S02_2_SOL29 DIVERT MODULE
SPARE
S02_2_SOL30 DIVERT MODULE
SPARE
S02_2_SOL31 DIVERT MODULE
SPARE
S02_2_SOL32 DIVERT MODULE
SPARE

DRAWING REVISIONS

REV	DESCRIPTION	DATE	BY
00	INITIAL DRAWINGS	04/25/2025	SK
A	AS-BUILT	11/13/2025	LB

autStand Automation Standard

CONFIDENTIAL: THE INFORMATION CONTAINED HEREIN IS PROPRIETARY INFORMATION OF AUTOMATION STANDARD LLC AND CONSTITUTES TRADE SECRETS PURSUANT TO THE UNIFORM TRADE SECRETS ACT. THIS INFORMATION SHALL ONLY BE USED IN THE PERFORMANCE OF CONTRACT WITH AUTSTAND. THIS INFORMATION SHALL NOT BE USED, REPRODUCED OR EMPLOYED IN WHOLE PART, EXCEPT WITH AUTSTAND's PRIOR WRITTEN APPROVAL.

25K Amazon Cross-Belt Sort Center (ACBSC)
S02_2_FIO9/S02_2_FIO10/
S02_2_FIO11/S02_2_FIO12 IO DRAWINGS

AMAZON MTN6
SPARROWS POINT, MD

FILENAME: 2429-AMZ-MTN6-MCM06-613
D-SIZE SCALE: NTS
JOB NUMBER: 2429
REVISION: A
SHEET: 58

Plotted: 11/21/2025 4:43 PM

S02_2_FIO13

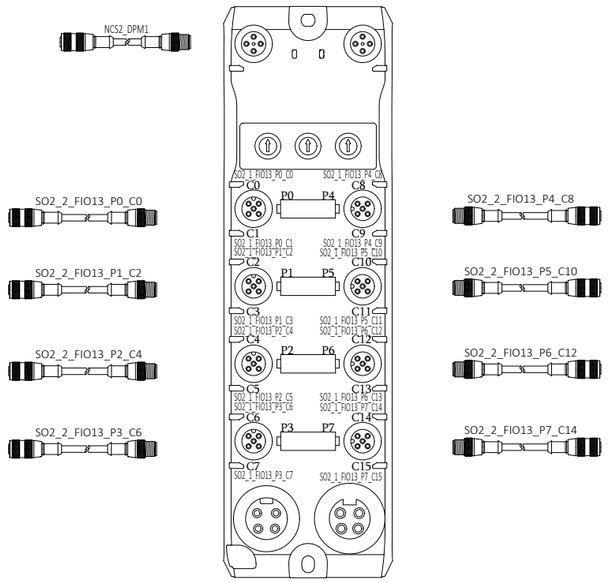

06614.01	SO2_2_SOL33 DIVERT MODULE	06614.21	SO2_2_SOL49 DIVERT MODULE
06614.02	SPARE	06614.22	SPARE
06614.03	SO2_2_SOL34 DIVERT MODULE	06614.23	SO2_2_SOL50 DIVERT MODULE
06614.04	SPARE	06614.24	SPARE
06614.05	SO2_2_SOL35 DIVERT MODULE	06614.25	SO2_2_SOL51 DIVERT MODULE
06614.06	SPARE	06614.26	SPARE
06614.07	SO2_2_SOL36 DIVERT MODULE	06614.27	SO2_2_SOL52 DIVERT MODULE
06614.08	SPARE	06614.28	SPARE
06614.09		06614.29	
06614.10		06614.30	

S02_2_FIO15

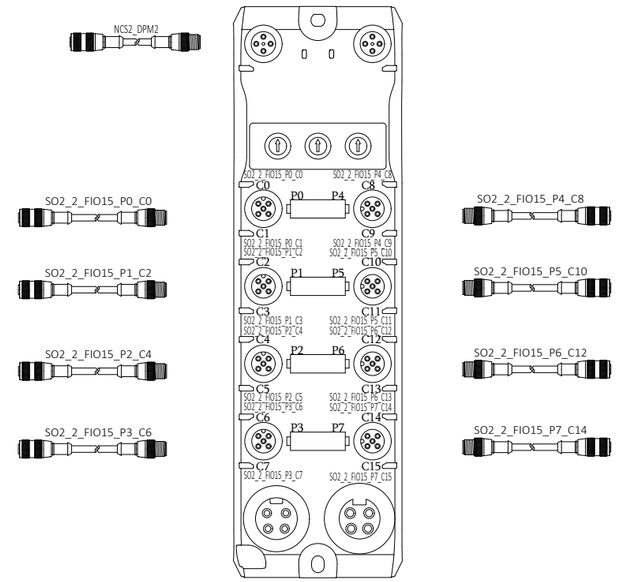

SO2_2_SOL37 DIVERT MODULE	SO2_2_SOL53 DIVERT MODULE		
SPARE	SPARE		
SO2_2_SOL38 DIVERT MODULE	SO2_2_SOL54 DIVERT MODULE		
SPARE	SPARE		
SO2_2_SOL39 DIVERT MODULE	SO2_2_SOL55 DIVERT MODULE		
SPARE	SPARE		
SO2_2_SOL40 DIVERT MODULE	SO2_2_SOL56 DIVERT MODULE		
SPARE	SPARE		

S02_2_FIO14

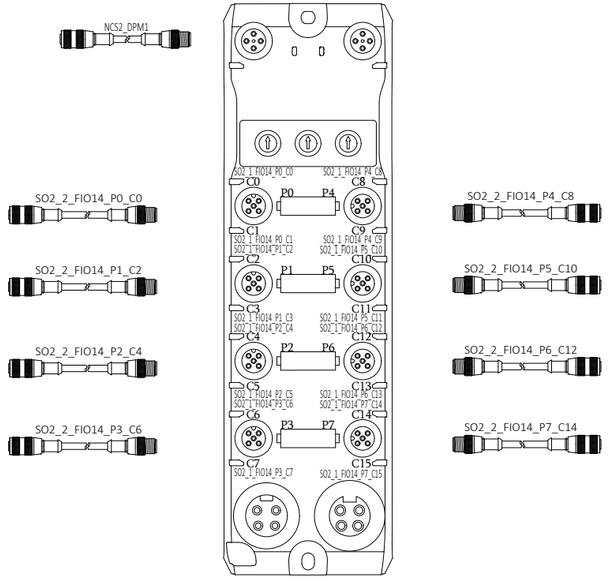

06614.11	SO2_2_SOL41 DIVERT MODULE	06614.31	SO2_2_SOL57 DIVERT MODULE
06614.12	SPARE	06614.32	SPARE
06614.13	SO2_2_SOL42 DIVERT MODULE	06614.33	SO2_2_SOL58 DIVERT MODULE
06614.14	SPARE	06614.34	SPARE
06614.15	SO2_2_SOL43 DIVERT MODULE	06614.35	SO2_2_SOL59 DIVERT MODULE
06614.16	SPARE	06614.36	SPARE
06614.17	SO2_2_SOL44 DIVERT MODULE	06614.37	SO2_2_SOL60 DIVERT MODULE
06614.18	SPARE	06614.38	SPARE
06614.19		06614.39	
06614.20		06614.40	

S02_2_FIO16

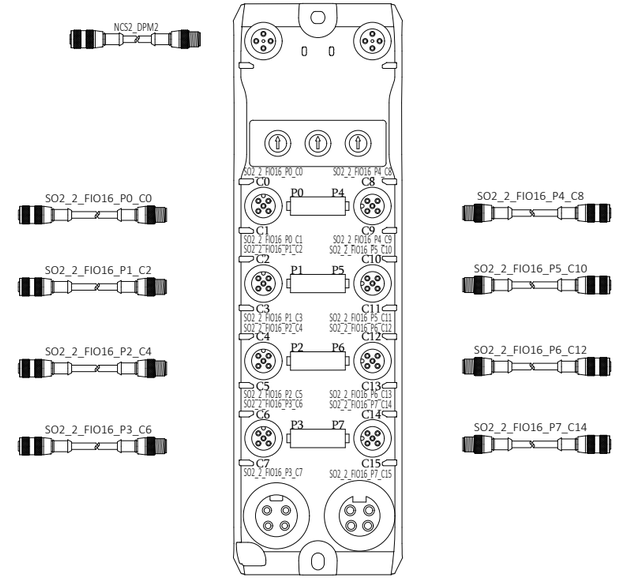

SO2_2_SOL45 DIVERT MODULE	SO2_2_SOL61 DIVERT MODULE		
SPARE	SPARE		
SO2_2_SOL46 DIVERT MODULE	SO2_2_SOL62 DIVERT MODULE		
SPARE	SPARE		
SO2_2_SOL47 DIVERT MODULE	SO2_2_SOL63 DIVERT MODULE		
SPARE	SPARE		
SO2_2_SOL48 DIVERT MODULE	SO2_2_SOL64 DIVERT MODULE		
SPARE	SPARE		

DRAWING REVISIONS

REV	DESCRIPTION	DATE	BY
00	INITIAL DRAWINGS	04/25/2025	SK
A	AS-BUILT	11/13/2025	LB

autStand
Automation Standard

CONFIDENTIAL: THE INFORMATION CONTAINED HEREIN IS PROPRIETARY INFORMATION OF AUTOMATION STANDARD LLC AND CONSTITUTES TRADE SECRETS PURSUANT TO THE UNIFORM TRADE SECRETS ACT. THIS INFORMATION SHALL ONLY BE USED IN THE PERFORMANCE OF CONTRACT WITH AUTSTAND. THIS INFORMATION SHALL NOT BE USED, REPRODUCED OR EMPLOYED IN WHOLE PART, EXCEPT WITH AUTSTAND's PRIOR WRITTEN APPROVAL.

25K Amazon Cross-Belt Sort Center (ACBSC)
S02_2_FIO13/S02_2_FIO14/
S02_2_FIO15/S02_2_FIO16

AMAZON MTN6
SPARROWS POINT, MD

FILENAME	
2429-AMZ-MTN6-MCM06-614	
D-SIZE SCALE	JOB NUMBER:
NTS	2429
REVISION	SHEET
A	59

Plotted: 11/21/2025 4:43 PM

S02_2_FIO17

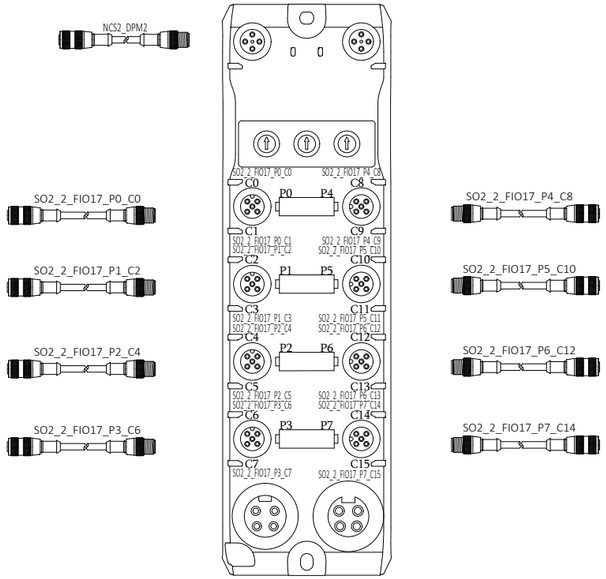

06615.01	SO2_2_SOL65 DIVERT MODULE	SO2_2_SOL69 DIVERT MODULE	06615.21
06615.02	SPARE	SPARE	06615.22
06615.03	SO2_2_SOL66 DIVERT MODULE	SO2_2_SOL70 DIVERT MODULE	06615.23
06615.04	SPARE	SPARE	06615.24
06615.05	SO2_2_SOL67 DIVERT MODULE	SO2_2_SOL71 DIVERT MODULE	06615.25
06615.06	SPARE	SPARE	06615.26
06615.07	SO2_2_SOL68 DIVERT MODULE	SO2_2_SOL72 DIVERT MODULE	06615.27
06615.08	SPARE	SPARE	06615.28
06615.09			06615.29
06615.10			06615.30

S02_2_FIO19

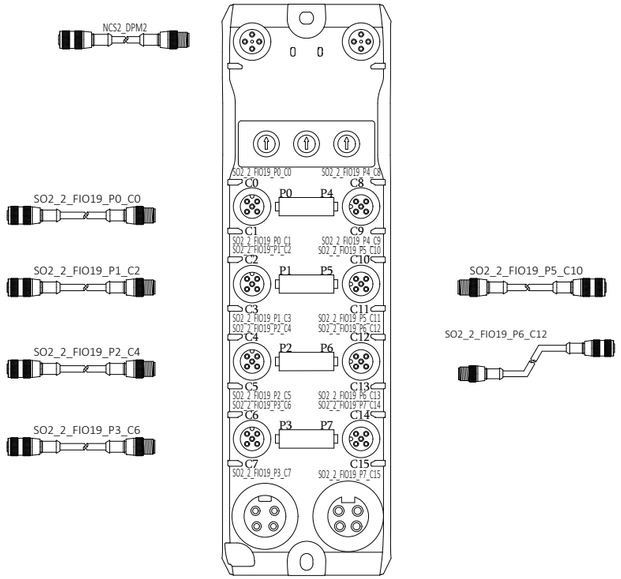

06615.21	SO2_2_SOL81 DIVERT MODULE	SPARE	
06615.22	SPARE	SPARE	
06615.23	SO2_2_SOL82 DIVERT MODULE	SO2_2_S4_PB START PUSHBUTTON	
06615.24	SPARE	SO2_2_S4_PB_LT START PUSHBUTTON LIGHT	
06615.25	SO2_2_SOL83 DIVERT MODULE	NCPRS2_2_MDR_Run MDR RUN SIGNAL	
06615.26	SPARE	SPARE	
06615.27	SO2_2_SOL84 DIVERT MODULE	SPARE	
06615.28	SPARE	SPARE	
06615.29			
06615.30			

S02_2_FIO18

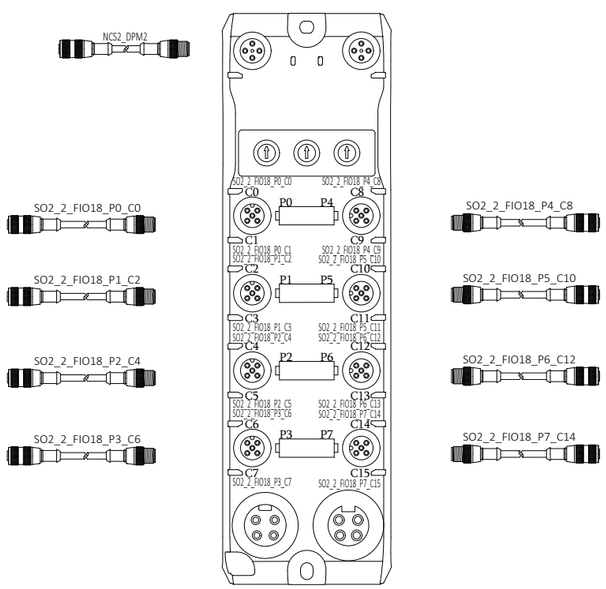

06615.11	SO2_2_SOL73 DIVERT MODULE	SO2_2_SOL77 DIVERT MODULE	06615.31
06615.12	SPARE	SPARE	06615.32
06615.13	SO2_2_SOL74 DIVERT MODULE	SO2_2_SOL78 DIVERT MODULE	06615.33
06615.14	SPARE	SPARE	06615.34
06615.15	SO2_2_SOL75 DIVERT MODULE	SO2_2_SOL79 DIVERT MODULE	06615.35
06615.16	SPARE	SPARE	06615.36
06615.17	SO2_2_SOL76 DIVERT MODULE	SO2_2_SOL80 DIVERT MODULE	06615.37
06615.18	SPARE	SPARE	06615.38
06615.19			06615.39
06615.20			06615.40

DRAWING REVISIONS

REV	DESCRIPTION	DATE	BY
00	INITIAL DRAWINGS	04/25/2025	SK
A	AS-BUILT	11/13/2025	LB

autStand Automation Standard

CONFIDENTIAL: THE INFORMATION CONTAINED HEREIN IS PROPRIETARY INFORMATION OF AUTOMATION STANDARD LLC AND CONSTITUTES TRADE SECRETS PURSUANT TO THE UNIFORM TRADE SECRETS ACT. THIS INFORMATION SHALL ONLY BE USED IN THE PERFORMANCE OF CONTRACT WITH AUTSTAND. THIS INFORMATION SHALL NOT BE USED, REPRODUCED OR EMPLOYED IN WHOLE PART, EXCEPT WITH AUTSTAND'S PRIOR WRITTEN APPROVAL.

25K Amazon Cross-Belt Sort Center (ACBSC)
S02_2_FIO17/S02_2_FIO18
S02_2_FIO19 IO DRAWINGS

AMAZON MTN6
SPARROWS POINT, MD

FILENAME	
2429-AMZ-MTN6-MCM06-615	
D-SIZE SCALE	JOB NUMBER:
NTS	2429
REVISION	SHEET
A	60

PDP8_FIO1

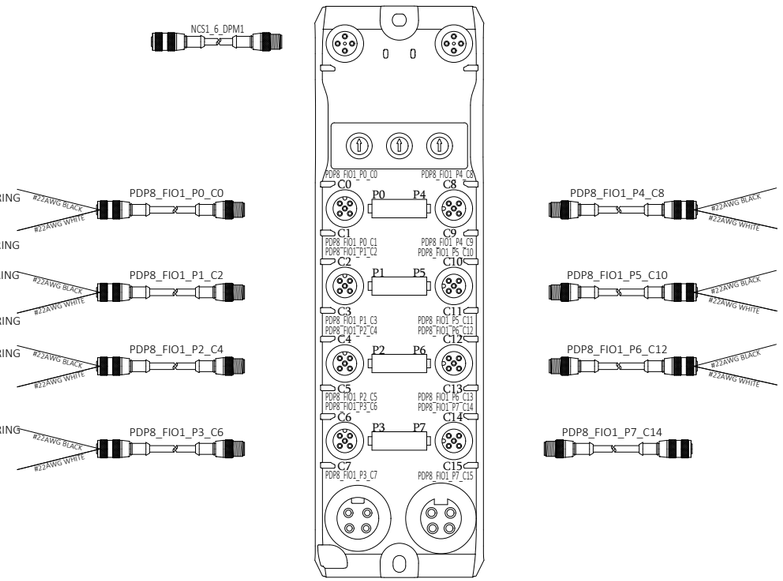

06616.01	PDP8_CB1 CIRCUIT BREAKER MONITORING	
06616.02	PDP8_CB3 CIRCUIT BREAKER MONITORING	
06616.03	PDP8_CB2 CIRCUIT BREAKER MONITORING	
06616.04	PDP8_CB4 CIRCUIT BREAKER MONITORING	
06616.05	PDP8_CB5 CIRCUIT BREAKER MONITORING	
06616.06	SPARE	
06616.07	PDP8_CB6 CIRCUIT BREAKER MONITORING	
06616.08	SPARE	
06616.09		
06616.10		
06616.11		PDP8_CB7 CIRCUIT BREAKER MONITORING
06616.12		PDP8_CB9 CIRCUIT BREAKER MONITORING
06616.13		PDP8_CB8 CIRCUIT BREAKER MONITORING
06616.14		PDP8_CB10 CIRCUIT BREAKER MONITORING
06616.15		PDP8_PWM1 PHASE MONITOR
06616.16		SPARE
06616.17		PDP8_FIOH1 FIO HUB
06616.18		
06616.19		
06616.20		

PDP8_FIOH1

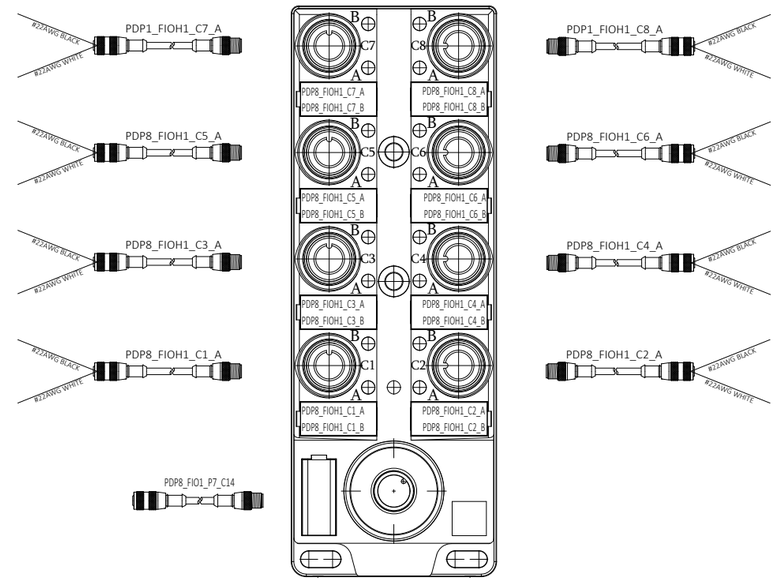

06616.21	PDP8_CB11 CIRCUIT BREAKER MONITORING	PDP8_CB19 CIRCUIT BREAKER MONITORING
06616.22	PDP8_CB13 CIRCUIT BREAKER MONITORING	PDP8_CB21 CIRCUIT BREAKER MONITORING
06616.23	PDP8_CB12 CIRCUIT BREAKER MONITORING	PDP8_CB20 CIRCUIT BREAKER MONITORING
06616.24	PDP8_CB14 CIRCUIT BREAKER MONITORING	PDP8_CB22 CIRCUIT BREAKER MONITORING
06616.25	PDP8_CB15 CIRCUIT BREAKER MONITORING	PDP8_CB23 CIRCUIT BREAKER MONITORING
06616.26	PDP8_CB17 CIRCUIT BREAKER MONITORING	PDP8_CB25 CIRCUIT BREAKER MONITORING
06616.27	PDP8_CB16 CIRCUIT BREAKER MONITORING	PDP8_CB24 CIRCUIT BREAKER MONITORING
06616.28	PDP8_CB18 CIRCUIT BREAKER MONITORING	PDP8_CB26 CIRCUIT BREAKER MONITORING
06616.29		
06616.30		
06616.31		
06616.32		NCP1_20_PE3 ENTRANCE PE
06616.33		NCP1_20_PS1 PRESSURE SENSOR NCP1_20_PE4 EXIT PE
06616.34		SPARE
06616.35		NCP1_20_SOL3 DIVERT MODULE
06616.36		SPARE
06616.37		NCP1_20_PE5 DEBRIS SENSOR
06616.38		NCP1_20_PE5 SEND
06616.39		

NCP1_20_FIO1

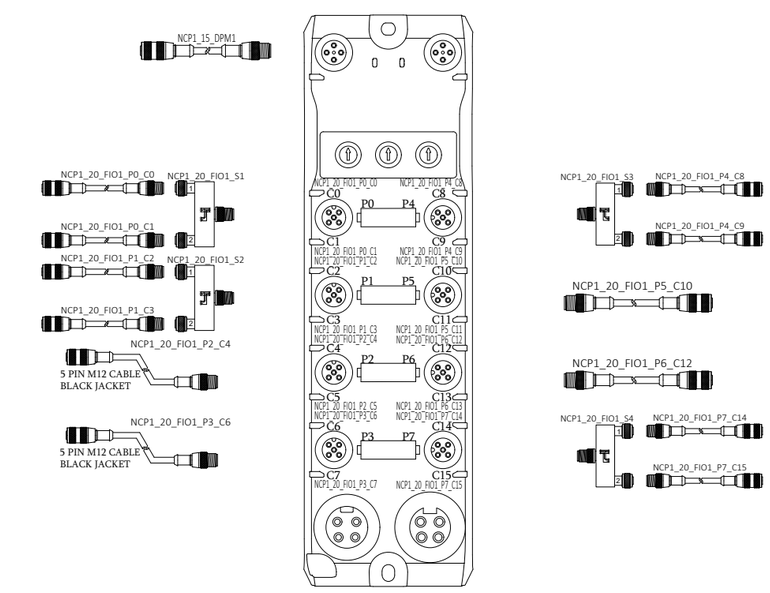

06616.11	NCP1_20_PE1 DEBRIS SENSOR	
06616.12	NCP1_20_PE1 SEND	
06616.13	NCP1_20_PE2 BELT ENGAGEMENT SENSOR	
06616.14	NCP1_20_PE2 SEND	
06616.15	NCP1_20_SOL1 DIVERT MODULE	
06616.16	SPARE	
06616.17	NCP1_20_SOL2 DIVERT MODULE	
06616.18	SPARE	
06616.19		
06616.20		

DRAWING REVISIONS

REV	DESCRIPTION	DATE	BY
00	INITIAL DRAWINGS	04/25/2025	SK
A	AS-BUILT	11/13/2025	LB

autStand
Automation Standard

CONFIDENTIAL: THE INFORMATION CONTAINED HEREIN IS PROPRIETARY INFORMATION OF AUTOMATION STANDARD LLC AND CONSTITUTES TRADE SECRETS PURSUANT TO THE UNIFORM TRADE SECRETS ACT. THIS INFORMATION SHALL ONLY BE USED IN THE PERFORMANCE OF CONTRACT WITH AUTSTAND. THIS INFORMATION SHALL NOT BE USED, REPRODUCED OR EMPLOYED IN WHOLE PART, EXCEPT WITH AUTSTAND'S PRIOR WRITTEN APPROVAL.

25K Amazon Cross-Belt Sort Center (ACBSC)
PDP8_FIO1/NCP1_20FIO1/
PDP8_FIOH1 IO DRAWINGS

AMAZON MTN6
SPARROWS POINT, MD

FILENAME	
2429-AMZ-MTN6-MCM06-616	
D-SIZE SCALE	JOB NUMBER:
NTS	2429
REVISION	SHEET
A	61

Plotted: 11/21/2025 4:43 PM

S02_1_FIO1

06617.01	S02_101CH_BCN1_G	GREEN BEACON LIGHT
06617.02	S02_101CH_BCN1_B	BLUE BEACON LIGHT
06617.03	S02_103CH_BCN1_G	GREEN BEACON LIGHT
06617.04	S02_103CH_BCN1_B	BLUE BEACON LIGHT
06617.05	S02_1_FIO1H1	HUB ARMOR BLOCK
06617.06	SPARE	
06617.07	SPARE	
06617.08	S02_101CH_BCN1_A	AMBER BEACON LIGHT
06617.09		
06617.10		

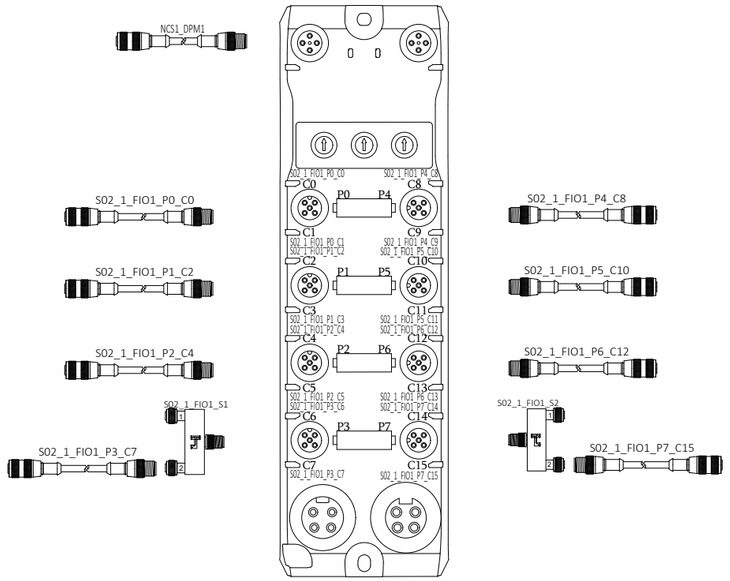

S02_105CH_BCN1_G	GREEN BEACON LIGHT	06617.21
S02_105CH_BCN1_B	BLUE BEACON LIGHT	06617.22
S02_107CH_BCN1_G	GREEN BEACON LIGHT	06617.23
S02_107CH_BCN1_B	BLUE BEACON LIGHT	06617.24
S02_1_FIO1H2	HUB ARMOR BLOCK	06617.25
SPARE		06617.26
SPARE		06617.27
S02_107CH_BCN1_A	AMBER BEACON LIGHT	06617.28
		06617.29
		06617.30

S02_1_FIO2

06617.21	S02_108CH_BCN1_G	GREEN BEACON LIGHT
06617.22	S02_108CH_BCN1_B	BLUE BEACON LIGHT
06617.23	S02_106CH_BCN1_G	GREEN BEACON LIGHT
06617.24	S02_106CH_BCN1_B	BLUE BEACON LIGHT
06617.25	S02_1_FIO2H2	HUB ARMOR BLOCK
06617.26	SPARE	
06617.27	SPARE	
06617.28	S02_108CH_BCN1_A	AMBER BEACON LIGHT
06617.29		
06617.30		

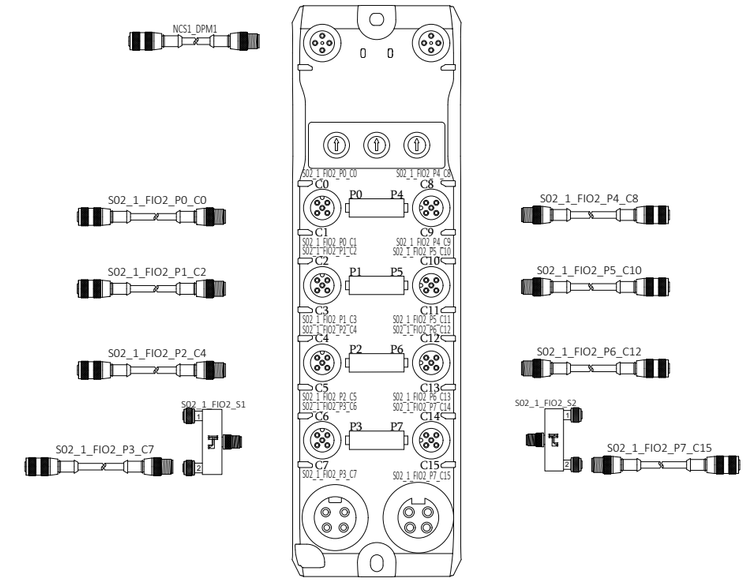

S02_104CH_BCN1_G	GREEN BEACON LIGHT	06617.21
S02_104CH_BCN1_B	BLUE BEACON LIGHT	06617.22
S02_102CH_BCN1_G	GREEN BEACON LIGHT	06617.23
S02_102CH_BCN1_B	BLUE BEACON LIGHT	06617.24
S02_1_FIO2H1	HUB ARMOR BLOCK	06617.25
SPARE		06617.26
SPARE		06617.27
S02_102CH_BCN1_A	AMBER BEACON LIGHT	06617.28
		06617.29
		06617.30

S02_1_FIO4

06617.11	S02_116CH_BCN1_G	GREEN BEACON LIGHT
06617.12	S02_116CH_BCN1_B	BLUE BEACON LIGHT
06617.13	S02_114CH_BCN1_G	GREEN BEACON LIGHT
06617.14	S02_114CH_BCN1_B	BLUE BEACON LIGHT
06617.15	S02_1_FIO4H2	HUB ARMOR BLOCK
06617.16	SPARE	
06617.17	SPARE	
06617.18	S02_116CH_BCN1_A	AMBER BEACON LIGHT
06617.19		
06617.20		

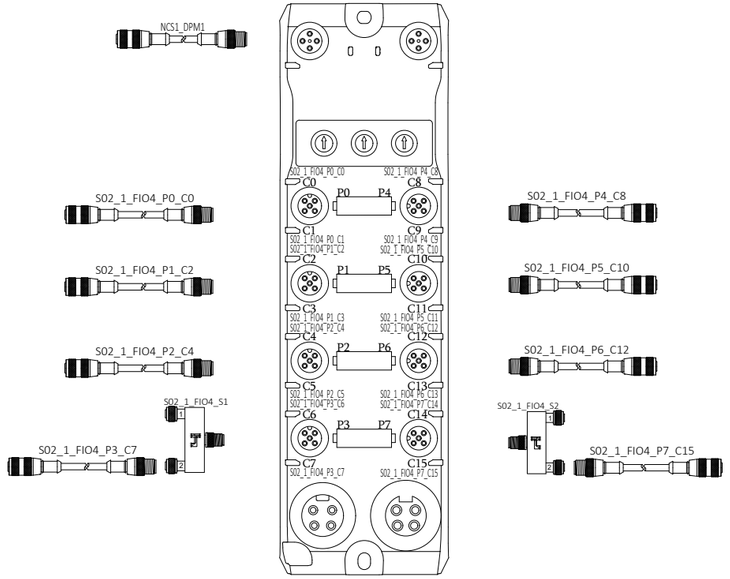

S02_112CH_BCN1_G	GREEN BEACON LIGHT	06617.31
S02_112CH_BCN1_B	BLUE BEACON LIGHT	06617.32
S02_110CH_BCN1_G	GREEN BEACON LIGHT	06617.33
S02_110CH_BCN1_B	BLUE BEACON LIGHT	06617.34
S02_1_FIO4H1	HUB ARMOR BLOCK	06617.35
SPARE		06617.36
SPARE		06617.37
S02_112CH_BCN1_A	AMBER BEACON LIGHT	06617.38
		06617.39
		06617.40

S02_1_FIO3

06617.31	S02_109CH_BCN1_G	GREEN BEACON LIGHT
06617.32	S02_109CH_BCN1_B	BLUE BEACON LIGHT
06617.33	S02_111CH_BCN1_G	GREEN BEACON LIGHT
06617.34	S02_111CH_BCN1_B	BLUE BEACON LIGHT
06617.35	S02_1_FIO3H1	HUB ARMOR BLOCK
06617.36	SPARE	
06617.37	SPARE	
06617.38	S02_111CH_BCN1_A	AMBER BEACON LIGHT
06617.39		
06617.40		

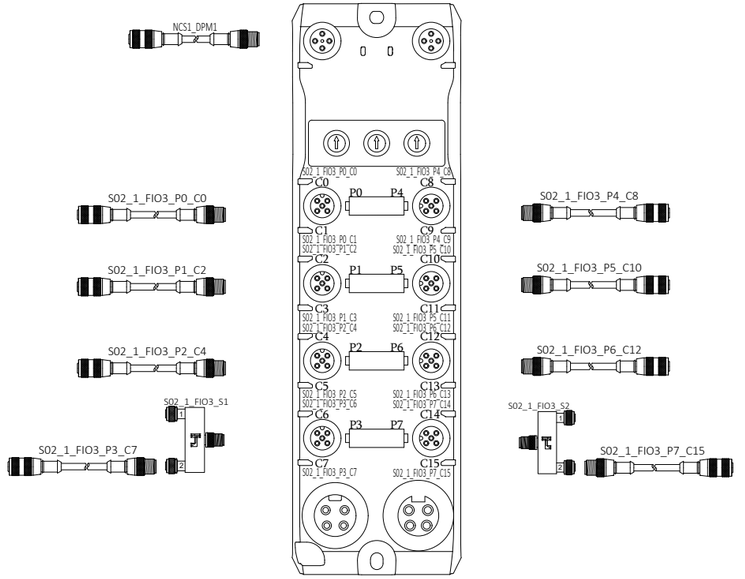

S02_113CH_BCN1_G	GREEN BEACON LIGHT	06617.31
S02_113CH_BCN1_B	BLUE BEACON LIGHT	06617.32
S02_115CH_BCN1_G	GREEN BEACON LIGHT	06617.33
S02_115CH_BCN1_B	BLUE BEACON LIGHT	06617.34
S02_1_FIO3H2	HUB ARMOR BLOCK	06617.35
SPARE		06617.36
SPARE		06617.37
S02_115CH_BCN1_A	AMBER BEACON LIGHT	06617.38
		06617.39
		06617.40

DRAWING REVISIONS

REV	DESCRIPTION	DATE	BY
00	INITIAL DRAWINGS	04/25/2025	SK
A	AS-BUILT	11/13/2025	LB

autStand
Automation Standard

CONFIDENTIAL: THE INFORMATION CONTAINED HEREIN IS PROPRIETARY INFORMATION OF AUTOMATION STANDARD LLC AND CONSTITUTES TRADE SECRETS PURSUANT TO THE UNIFORM TRADE SECRETS ACT. THIS INFORMATION SHALL ONLY BE USED IN THE PERFORMANCE OF CONTRACT WITH AUTSTAND. THIS INFORMATION SHALL NOT BE USED, REPRODUCED OR EMPLOYED IN WHOLE PART, EXCEPT WITH AUTSTAND's PRIOR WRITTEN APPROVAL.

25K Amazon Cross-Belt Sort Center (ACBSC)
S02_1_FIO1/S02_1_FIO2
S02_1_FIO3/S02_1_FIO4 IO DRAWINGS

AMAZON MTN6
SPARROWS POINT, MD

FILENAME	
2429-AMZ-MTN6-MCM06-617	
D-SIZE SCALE	JOB NUMBER:
NTS	2429
REVISION	SHEET
A	62

Plotted: 11/21/2025 4:43 PM

S02_1_FIO5

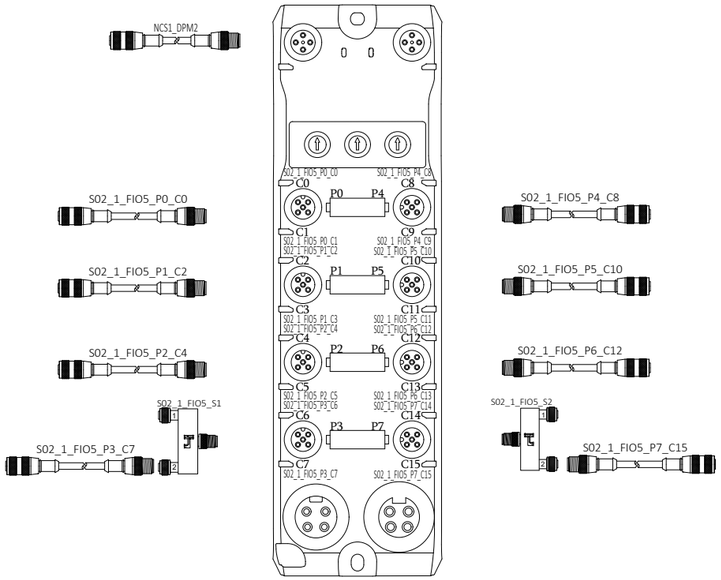

06618.01	S02_117CH_BCN1_G GREEN BEACON LIGHT	S02_121CH_BCN1_G GREEN BEACON LIGHT	
06618.02	S02_117CH_BCN1_B BLUE BEACON LIGHT	S02_121CH_BCN1_B BLUE BEACON LIGHT	
06618.03	S02_119CH_BCN1_G GREEN BEACON LIGHT	S02_123CH_BCN1_G GREEN BEACON LIGHT	
06618.04	S02_119CH_BCN1_B BLUE BEACON LIGHT	S02_123CH_BCN1_B BLUE BEACON LIGHT	
06618.05	S02_1_FIO5H1 HUB ARMOR BLOCK	S02_1_FIO5H2 HUB ARMOR BLOCK	
06618.06	SPARE	SPARE	
06618.07	SPARE	SPARE	
06618.08	S02_117CH_BCN1_A AMBER BEACON LIGHT	S02_121CH_BCN1_A AMBER BEACON LIGHT	
06618.09			
06618.10			

S02_1_FIO6

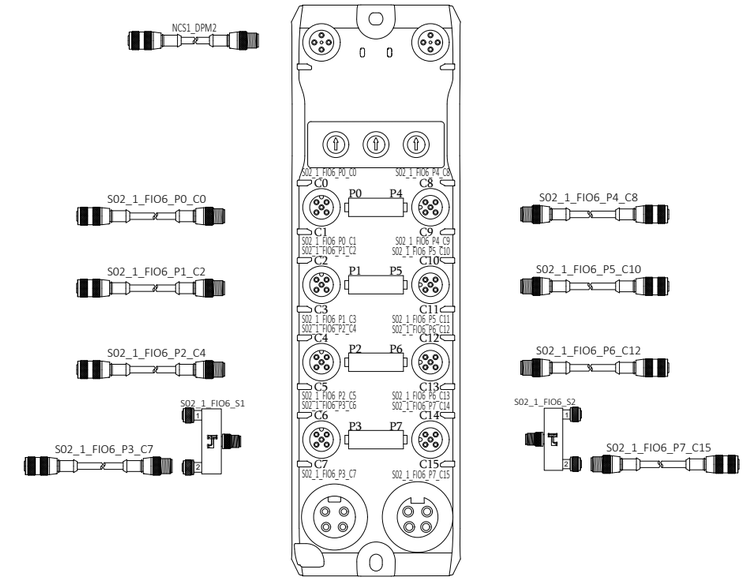

06618.21	S02_124CH_BCN1_G GREEN BEACON LIGHT	S02_120CH_BCN1_G GREEN BEACON LIGHT	
06618.22	S02_124CH_BCN1_B BLUE BEACON LIGHT	S02_120CH_BCN1_B BLUE BEACON LIGHT	
06618.23	S02_122CH_BCN1_G GREEN BEACON LIGHT	S02_118CH_BCN1_G GREEN BEACON LIGHT	
06618.24	S02_122CH_BCN1_B BLUE BEACON LIGHT	S02_118CH_BCN1_B BLUE BEACON LIGHT	
06618.25	S02_1_FIO6H2 HUB ARMOR BLOCK	S02_1_FIO6H1 HUB ARMOR BLOCK	
06618.26	SPARE	SPARE	
06618.27	SPARE	SPARE	
06618.28	S02_122CH_BCN1_A AMBER BEACON LIGHT	S02_118CH_BCN1_A AMBER BEACON LIGHT	
06618.29			
06618.30			

S02_1_FIO8

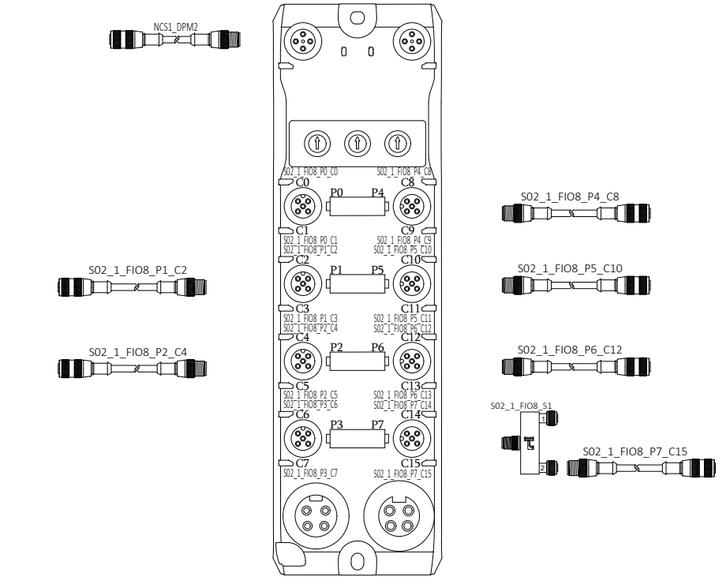

06618.11	SPARE	S02_128CH_BCN1_G GREEN BEACON LIGHT	
06618.12	SPARE	S02_128CH_BCN1_B BLUE BEACON LIGHT	
06618.13	S02_130CH_BCN1_G GREEN BEACON LIGHT	S02_126CH_BCN1_G GREEN BEACON LIGHT	
06618.14	S02_130CH_BCN1_B BLUE BEACON LIGHT	S02_126CH_BCN1_B BLUE BEACON LIGHT	
06618.15	S02_1_FIO8H2 HUB ARMOR BLOCK	S02_1_FIO8H1 HUB ARMOR BLOCK	
06618.16	SPARE	SPARE	
06618.17	SPARE	SPARE	
06618.18	SPARE	S02_128CH_BCN1_A AMBER BEACON LIGHT	
06618.19			
06618.20			

S02_1_FIO7

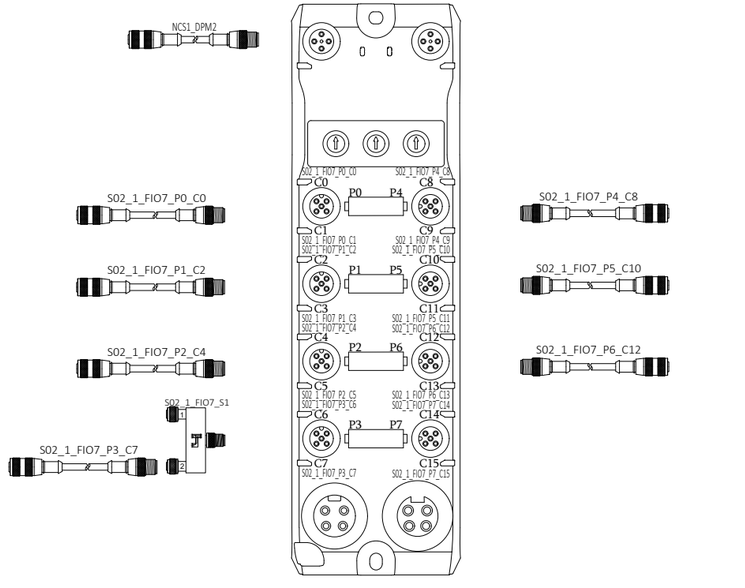

06618.31	S02_125CH_BCN1_G GREEN BEACON LIGHT	S02_129CH_BCN1_G GREEN BEACON LIGHT	
06618.32	S02_125CH_BCN1_B BLUE BEACON LIGHT	S02_129CH_BCN1_B BLUE BEACON LIGHT	
06618.33	S02_127CH_BCN1_G GREEN BEACON LIGHT	SPARE	
06618.34	S02_127CH_BCN1_B BLUE BEACON LIGHT	SPARE	
06618.35	S02_1_FIO7H1 HUB ARMOR BLOCK	S02_1_FIO7H2 HUB ARMOR BLOCK	
06618.36	SPARE	SPARE	
06618.37	SPARE	SPARE	
06618.38	S02_127CH_BCN1_A AMBER BEACON LIGHT	SPARE	
06618.39			
06618.40			

DRAWING REVISIONS

REV.	DESCRIPTION	DATE	BY
00	INITIAL DRAWINGS	04/25/2025	SK
A	AS-BUILT	11/13/2025	LB

autStand
Automation Standard

CONFIDENTIAL: THE INFORMATION CONTAINED HEREIN IS PROPRIETARY INFORMATION OF AUTOMATION STANDARD LLC AND CONSTITUTES TRADE SECRETS PURSUANT TO THE UNIFORM TRADE SECRETS ACT. THIS INFORMATION SHALL ONLY BE USED IN THE PERFORMANCE OF CONTRACT WITH AUTSTAND. THIS INFORMATION SHALL NOT BE USED, REPRODUCED OR EMPLOYED IN WHOLE PART, EXCEPT WITH AUTSTAND's PRIOR WRITTEN APPROVAL.

25K Amazon Cross-Belt Sort Center (ACBSC)
S02_1_FIO5/S02_1_FIO6
S02_1_FIO7/S02_1_FIO8 IO DRAWINGS

AMAZON MTN6
SPARROWS POINT, MD

FILENAME	
2429-AMZ-MTN6-MCM06-618	
D-SIZE SCALE	JOB NUMBER:
NTS	2429
REVISION	SHEET
A	63

Plotted: 11/21/2025 4:43 PM

S02_2_FIO1

06601.01	S02_201CH_BCN1_G GREEN BEACON LIGHT	S02_205CH_BCN1_G GREEN BEACON LIGHT
06601.02	S02_201CH_BCN1_B BLUE BEACON LIGHT	S02_205CH_BCN1_B BLUE BEACON LIGHT
06601.03	S02_203CH_BCN1_G GREEN BEACON LIGHT	S02_207CH_BCN1_G GREEN BEACON LIGHT
06601.04	S02_203CH_BCN1_B BLUE BEACON LIGHT	S02_207CH_BCN1_B BLUE BEACON LIGHT
06601.05	S02_2_FIO1H1 HUB ARMOR BLOCK	S02_2_FIO1H2 HUB ARMOR BLOCK
06601.06	SPARE	SPARE
06601.07	SPARE	SPARE
06601.08	S02_201CH_BCN1_A AMBER BEACON LIGHT	S02_207CH_BCN1_A AMBER BEACON LIGHT
06601.09		
06601.10		

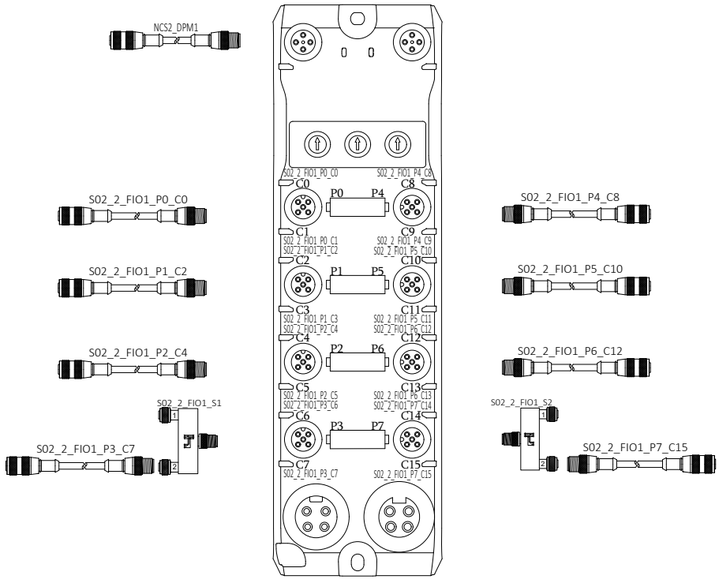

S02_2_FIO2

06601.21	S02_208CH_BCN1_G GREEN BEACON LIGHT	S02_204CH_BCN1_G GREEN BEACON LIGHT
06601.22	S02_208CH_BCN1_B BLUE BEACON LIGHT	S02_204CH_BCN1_B BLUE BEACON LIGHT
06601.23	S02_206CH_BCN1_G GREEN BEACON LIGHT	S02_202CH_BCN1_G GREEN BEACON LIGHT
06601.24	S02_206CH_BCN1_B BLUE BEACON LIGHT	S02_202CH_BCN1_B BLUE BEACON LIGHT
06601.25	S02_2_FIO2H1 HUB ARMOR BLOCK	S02_2_FIO2H2 HUB ARMOR BLOCK
06601.26	SPARE	SPARE
06601.27	SPARE	SPARE
06601.28	S02_208CH_BCN1_A AMBER BEACON LIGHT	S02_202CH_BCN1_A AMBER BEACON LIGHT
06601.29		
06601.30		

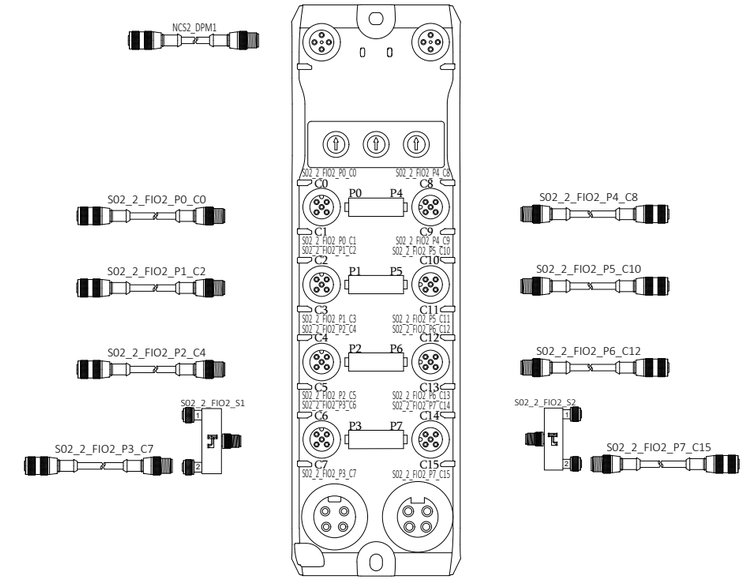

S02_2_FIO4

06601.11	S02_216CH_BCN1_G GREEN BEACON LIGHT	S02_212CH_BCN1_G GREEN BEACON LIGHT
06601.12	S02_216CH_BCN1_B BLUE BEACON LIGHT	S02_212CH_BCN1_B BLUE BEACON LIGHT
06601.13	S02_214CH_BCN1_G GREEN BEACON LIGHT	S02_210CH_BCN1_G GREEN BEACON LIGHT
06601.14	S02_214CH_BCN1_B BLUE BEACON LIGHT	S02_210CH_BCN1_B BLUE BEACON LIGHT
06601.15	S02_2_FIO4H2 HUB ARMOR BLOCK	S02_2_FIO4H1 HUB ARMOR BLOCK
06601.16	SPARE	SPARE
06601.17	SPARE	SPARE
06601.18	S02_216CH_BCN1_A AMBER BEACON LIGHT	S02_212CH_BCN1_A AMBER BEACON LIGHT
06601.19		
06601.20		

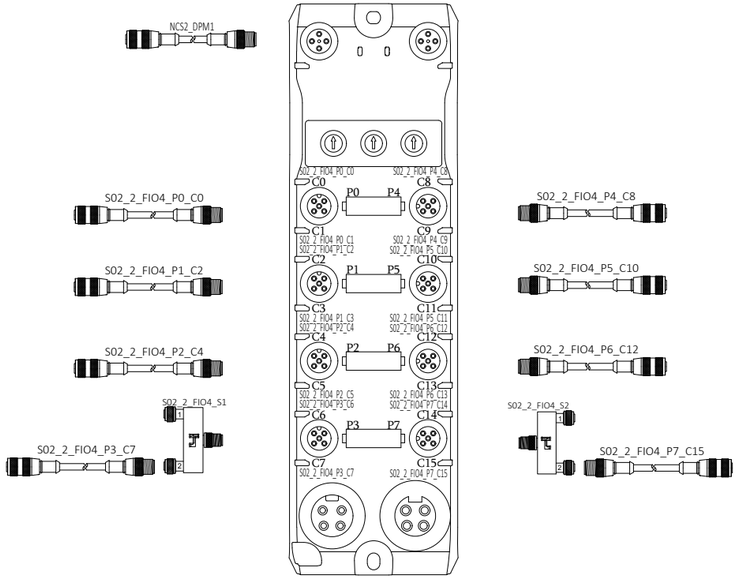

S02_2_FIO3

06601.31	S02_209CH_BCN1_G GREEN BEACON LIGHT	S02_213CH_BCN1_G GREEN BEACON LIGHT
06601.32	S02_209CH_BCN1_B BLUE BEACON LIGHT	S02_213CH_BCN1_B BLUE BEACON LIGHT
06601.33	S02_211CH_BCN1_G GREEN BEACON LIGHT	S02_215CH_BCN1_G GREEN BEACON LIGHT
06601.34	S02_211CH_BCN1_B BLUE BEACON LIGHT	S02_215CH_BCN1_B BLUE BEACON LIGHT
06601.35	S02_2_FIO3H1 HUB ARMOR BLOCK	S02_2_FIO3H2 HUB ARMOR BLOCK
06601.36	SPARE	SPARE
06601.37	SPARE	SPARE
06601.38	S02_211CH_BCN1_A AMBER BEACON LIGHT	S02_215CH_BCN1_A AMBER BEACON LIGHT
06601.39		
06601.40		

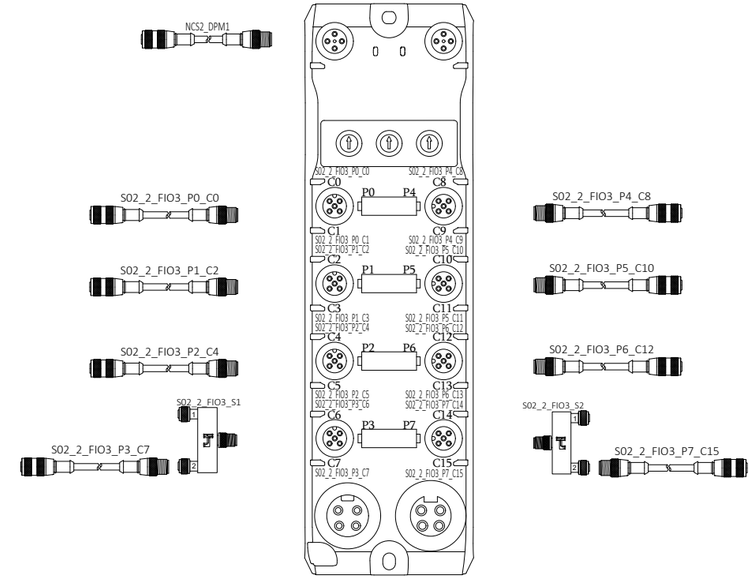

DRAWING REVISIONS

REV	DESCRIPTION	DATE	BY
00	INITIAL DRAWINGS	04/25/2025	SK
A	AS-BUILT	11/13/2025	LB

autStand
Automation Standard

CONFIDENTIAL: THE INFORMATION CONTAINED HEREIN IS PROPRIETARY INFORMATION OF AUTOMATION STANDARD LLC AND CONSTITUTES TRADE SECRETS PURSUANT TO THE UNIFORM TRADE SECRETS ACT. THIS INFORMATION SHALL ONLY BE USED IN THE PERFORMANCE OF CONTRACT WITH AUTSTAND. THIS INFORMATION SHALL NOT BE USED, REPRODUCED OR EMPLOYED IN WHOLE PART, EXCEPT WITH AUTSTAND's PRIOR WRITTEN APPROVAL.

25K Amazon Cross-Belt Sort Center (ACBSC)
S02_2_FIO1/S02_2_FIO2
S02_2_FIO3/S02_2_FIO4 IO DRAWINGS

AMAZON MTN6
SPARROWS POINT, MD

FILENAME	
2429-AMZ-MTN6-MCM06-619	
D-SIZE SCALE	JOB NUMBER:
NTS	2429
REVISION	SHEET
A	64

Plotted: 11/21/2025 4:43 PM

S02_2_FIO5

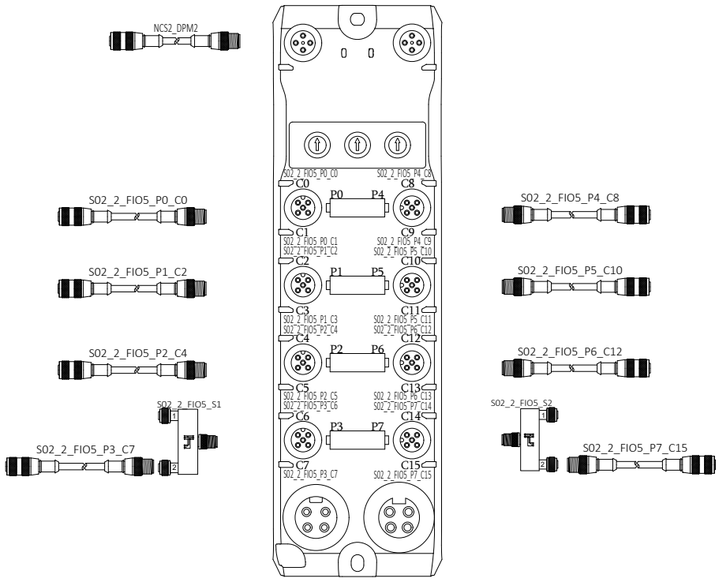

06620.01	S02_217CH_BCN1_G GREEN BEACON LIGHT	S02_221CH_BCN1_G GREEN BEACON LIGHT	
06620.02	S02_217CH_BCN1_B BLUE BEACON LIGHT	S02_221CH_BCN1_B BLUE BEACON LIGHT	
06620.03	S02_219CH_BCN1_G GREEN BEACON LIGHT	S02_223CH_BCN1_G GREEN BEACON LIGHT	
06620.04	S02_219CH_BCN1_B BLUE BEACON LIGHT	S02_223CH_BCN1_B BLUE BEACON LIGHT	
06620.05	S02_2_FIO5H1 HUB ARMOR BLOCK	S02_2_FIO5H2 HUB ARMOR BLOCK	
06620.06	SPARE	SPARE	
06620.07	SPARE	SPARE	
06620.08	S02_217CH_BCN1_A AMBER BEACON LIGHT	S02_221CH_BCN1_A AMBER BEACON LIGHT	
06620.09			
06620.10			

S02_2_FIO6

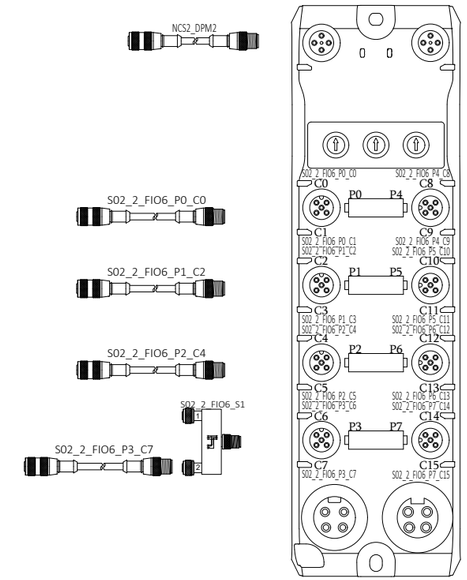

06620.21	S02_224CH_BCN1_G GREEN BEACON LIGHT		S02_220CH_BCN1_G GREEN BEACON LIGHT
06620.22	S02_224CH_BCN1_B BLUE BEACON LIGHT		S02_220CH_BCN1_B BLUE BEACON LIGHT
06620.23	S02_222CH_BCN1_G GREEN BEACON LIGHT		S02_218CH_BCN1_G GREEN BEACON LIGHT
06620.24	S02_222CH_BCN1_B BLUE BEACON LIGHT		S02_218CH_BCN1_B BLUE BEACON LIGHT
06620.25	S02_2_FIO6H2 HUB ARMOR BLOCK		S02_2_FIO6H1 HUB ARMOR BLOCK
06620.26	SPARE		SPARE
06620.27	SPARE		SPARE
06620.28	S02_222CH_BCN1_A AMBER BEACON LIGHT		SPARE
06620.29			
06620.30			

S02_2_FIO8

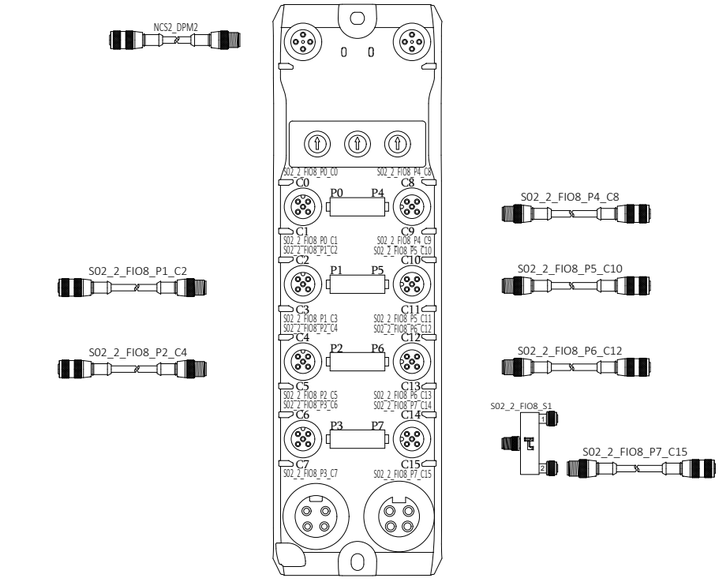

06620.11	SPARE	S02_228CH_BCN1_G GREEN BEACON LIGHT	
06620.12	SPARE	S02_228CH_BCN1_B BLUE BEACON LIGHT	
06620.13	S02_230CH_BCN1_G GREEN BEACON LIGHT	S02_226CH_BCN1_G GREEN BEACON LIGHT	
06620.14	S02_230CH_BCN1_B BLUE BEACON LIGHT	S02_226CH_BCN1_B BLUE BEACON LIGHT	
06620.15	S02_2_FIO8H2 HUB ARMOR BLOCK	S02_2_FIO8H1 HUB ARMOR BLOCK	
06620.16	SPARE	SPARE	
06620.17	SPARE	SPARE	
06620.18	SPARE	S02_228CH_BCN1_A AMBER BEACON LIGHT	
06620.19			
06620.20			

S02_2_FIO7

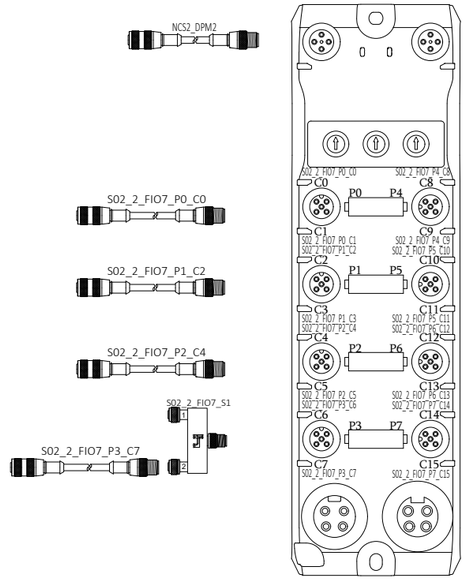

06620.31	S02_225CH_BCN1_G GREEN BEACON LIGHT		S02_229CH_BCN1_G GREEN BEACON LIGHT
06620.32	S02_225CH_BCN1_B BLUE BEACON LIGHT		S02_229CH_BCN1_B BLUE BEACON LIGHT
06620.33	S02_227CH_BCN1_G GREEN BEACON LIGHT		SPARE
06620.34	S02_227CH_BCN1_B BLUE BEACON LIGHT		SPARE
06620.35	S02_2_FIO7H1 HUB ARMOR BLOCK		S02_2_FIO7H2 HUB ARMOR BLOCK
06620.36	SPARE		SPARE
06620.37	SPARE		SPARE
06620.38	S02_227CH_BCN1_A AMBER BEACON LIGHT		S02_218CH_BCN1_A AMBER BEACON LIGHT
06620.39			
06620.40			

DRAWING REVISIONS

REV	DESCRIPTION	DATE	BY
00	INITIAL DRAWINGS	04/25/2025	SK
A	AS-BUILT	11/13/2025	LB

autStand
Automation Standard

CONFIDENTIAL: THE INFORMATION CONTAINED HEREIN IS PROPRIETARY INFORMATION OF AUTOMATION STANDARD LLC AND CONSTITUTES TRADE SECRETS PURSUANT TO THE UNIFORM TRADE SECRETS ACT. THIS INFORMATION SHALL ONLY BE USED IN THE PERFORMANCE OF CONTRACT WITH AUTSTAND. THIS INFORMATION SHALL NOT BE USED, REPRODUCED OR EMPLOYED IN WHOLE PART, EXCEPT WITH AUTSTAND'S PRIOR WRITTEN APPROVAL.

25K Amazon Cross-Belt Sort Center (ACBSC)
S02_2_FIO5/S02_2_FIO6
S02_2_FIO7/S02_2_FIO8 IO DRAWINGS

AMAZON MTN6
SPARROWS POINT, MD

FILENAME	
2429-AMZ-MTN6-MCM06-620	
D-SIZE SCALE	JOB NUMBER:
NTS	2429
REVISION	SHEET
A	65

Plotted: 11/21/2025 4:43 PM

S02_1_FIO1H1

06621.01	S02_1_JR1_PB	JAM RESET PUSHBUTTON
06621.02	S02_1_JR1_PB_LT	JAM RESET PUSHBUTTON LIGHT
06621.03	S02_103CH_PX1	PROXIMITY SENSOR
06621.04	S02_103CH_PX2	PROXIMITY SENSOR
06621.05	S02_103CH_GS1_PB	CHUTE ENABLE PUSHBUTTON
06621.06	S02_103CH_GS1_PB_LT	CHUTE ENABLE PUSHBUTTON LIGHT
06621.07	S02_103CH_PE1	FULL PHOTOEYE 100%
06621.08	S02_103CH_PE2	FULL PHOTOEYE 50%
06621.09		
06621.10		

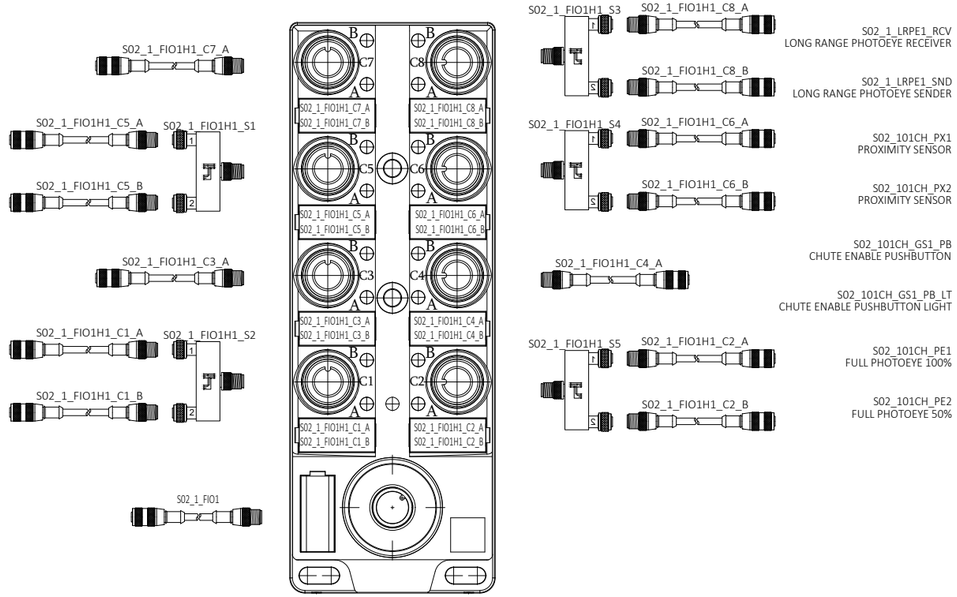

S02_1_LRPE1_RCV	LONG RANGE PHOTOEYE RECEIVER
S02_1_LRPE1_SND	LONG RANGE PHOTOEYE SENDER
S02_101CH_PX1	PROXIMITY SENSOR
S02_101CH_PX2	PROXIMITY SENSOR
S02_101CH_GS1_PB	CHUTE ENABLE PUSHBUTTON
S02_101CH_GS1_PB_LT	CHUTE ENABLE PUSHBUTTON LIGHT
S02_101CH_PE1	FULL PHOTOEYE 100%
S02_101CH_PE2	FULL PHOTOEYE 50%

S02_1_FIO2H1

06621.21	S02_1_JR2_PB	JAM RESET PUSHBUTTON
06621.22	S02_1_JR2_PB_LT	JAM RESET PUSHBUTTON LIGHT
06621.23	S02_102CH_PX1	PROXIMITY SENSOR
06621.24	S02_102CH_PX2	PROXIMITY SENSOR
06621.25	S02_102CH_GS1_PB	CHUTE ENABLE PUSHBUTTON
06621.26	S02_102CH_GS1_PB_LT	CHUTE ENABLE PUSHBUTTON LIGHT
06621.27	S02_102CH_PE1	FULL PHOTOEYE 100%
06621.28	S02_102CH_PE2	FULL PHOTOEYE 50%
06621.29		
06621.30		

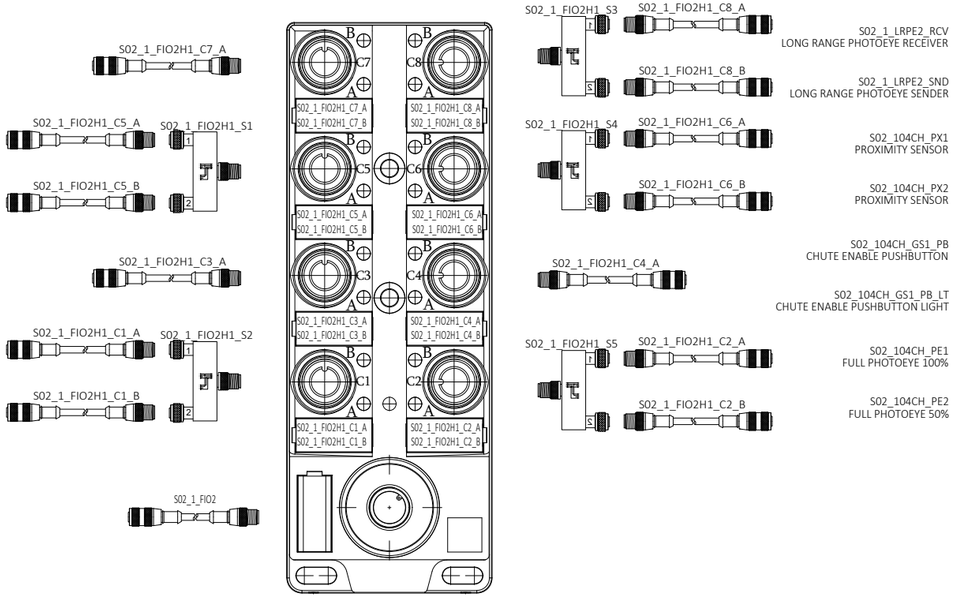

S02_1_LRPE2_RCV	LONG RANGE PHOTOEYE RECEIVER
S02_1_LRPE2_SND	LONG RANGE PHOTOEYE SENDER
S02_104CH_PX1	PROXIMITY SENSOR
S02_104CH_PX2	PROXIMITY SENSOR
S02_104CH_GS1_PB	CHUTE ENABLE PUSHBUTTON
S02_104CH_GS1_PB_LT	CHUTE ENABLE PUSHBUTTON LIGHT
S02_104CH_PE1	FULL PHOTOEYE 100%
S02_104CH_PE2	FULL PHOTOEYE 50%

S02_1_FIO1H2

06621.11	S02_1_JR3_PB	JAM RESET PUSHBUTTON
06621.12	S02_1_JR3_PB_LT	JAM RESET PUSHBUTTON LIGHT
06621.13	S02_107CH_PX1	PROXIMITY SENSOR
06621.14	S02_107CH_PX2	PROXIMITY SENSOR
06621.15	S02_107CH_GS1_PB	CHUTE ENABLE PUSHBUTTON
06621.16	S02_107CH_GS1_PB_LT	CHUTE ENABLE PUSHBUTTON LIGHT
06621.17	S02_107CH_PE1	FULL PHOTOEYE 100%
06621.18	S02_107CH_PE2	FULL PHOTOEYE 50%
06621.19		
06621.20		

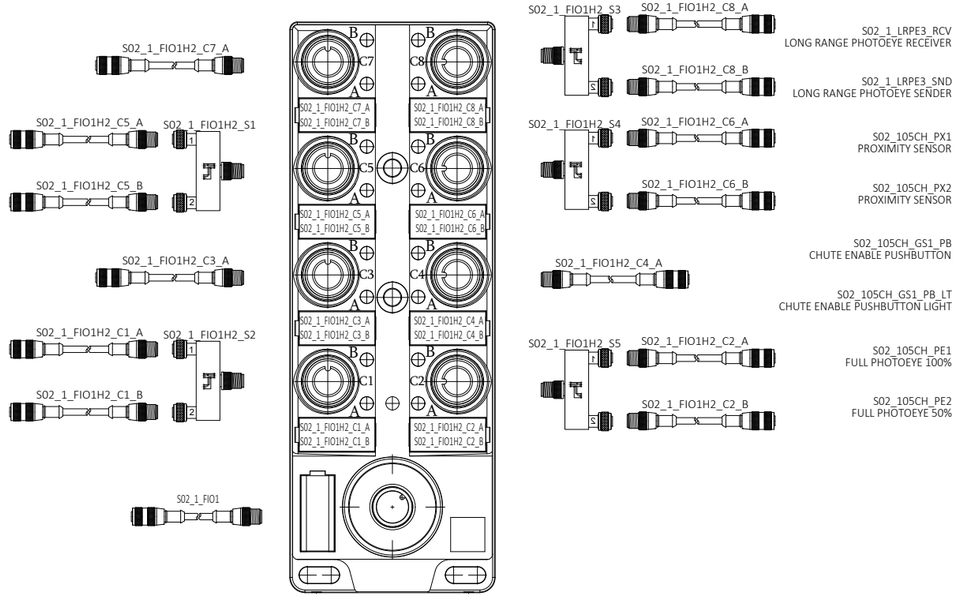

S02_1_LRPE3_RCV	LONG RANGE PHOTOEYE RECEIVER
S02_1_LRPE3_SND	LONG RANGE PHOTOEYE SENDER
S02_105CH_PX1	PROXIMITY SENSOR
S02_105CH_PX2	PROXIMITY SENSOR
S02_105CH_GS1_PB	CHUTE ENABLE PUSHBUTTON
S02_105CH_GS1_PB_LT	CHUTE ENABLE PUSHBUTTON LIGHT
S02_105CH_PE1	FULL PHOTOEYE 100%
S02_105CH_PE2	FULL PHOTOEYE 50%

S02_1_FIO2H2

06621.31	S02_1_JR4_PB	JAM RESET PUSHBUTTON
06621.32	S02_1_JR4_PB_LT	JAM RESET PUSHBUTTON LIGHT
06621.33	S02_106CH_PX1	PROXIMITY SENSOR
06621.34	S02_106CH_PX2	PROXIMITY SENSOR
06621.35	S02_106CH_GS1_PB	CHUTE ENABLE PUSHBUTTON
06621.36	S02_106CH_GS1_PB_LT	CHUTE ENABLE PUSHBUTTON LIGHT
06621.37	S02_106CH_PE1	FULL PHOTOEYE 100%
06621.38	S02_106CH_PE2	FULL PHOTOEYE 50%
06621.39		
06621.40		

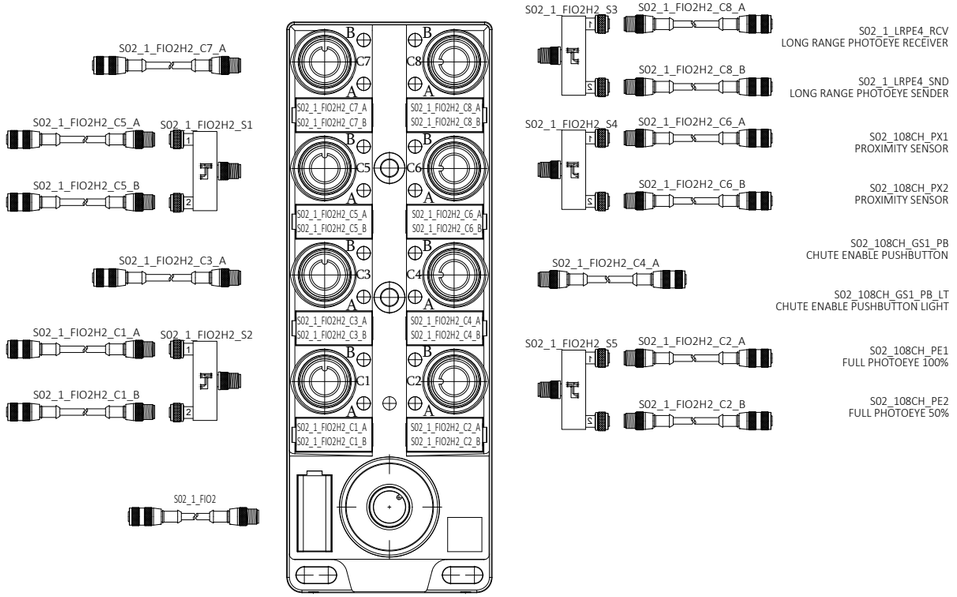

S02_1_LRPE4_RCV	LONG RANGE PHOTOEYE RECEIVER
S02_1_LRPE4_SND	LONG RANGE PHOTOEYE SENDER
S02_108CH_PX1	PROXIMITY SENSOR
S02_108CH_PX2	PROXIMITY SENSOR
S02_108CH_GS1_PB	CHUTE ENABLE PUSHBUTTON
S02_108CH_GS1_PB_LT	CHUTE ENABLE PUSHBUTTON LIGHT
S02_108CH_PE1	FULL PHOTOEYE 100%
S02_108CH_PE2	FULL PHOTOEYE 50%

DRAWING REVISIONS

REV	DESCRIPTION	DATE	BY
00	INITIAL DRAWINGS	04/25/2025	SK
A	AS-BUILT	11/13/2025	LB

autStand Automation Standard

CONFIDENTIAL: THE INFORMATION CONTAINED HEREIN IS PROPRIETARY INFORMATION OF AUTOMATION STANDARD LLC AND CONSTITUTES TRADE SECRETS PURSUANT TO THE UNIFORM TRADE SECRETS ACT. THIS INFORMATION SHALL ONLY BE USED IN THE PERFORMANCE OF CONTRACT WITH AUTSTAND. THIS INFORMATION SHALL NOT BE USED, REPRODUCED OR EMPLOYED IN WHOLE PART, EXCEPT WITH AUTSTAND's PRIOR WRITTEN APPROVAL.

25K Amazon Cross-Belt Sort Center (ACBSC)
S02_1_FIO1H1/S02_1_FIO1H2
S02_1_FIO2H1/S02_1_FIO2H2 IO DRAWINGS

AMAZON MTN6
SPARROWS POINT, MD

FILENAME	
2429-AMZ-MTN6-MCM06-621	
D-SIZE SCALE	JOB NUMBER:
NTS	2429
REVISION	SHEET
A	66

Plotted: 11/21/2025 4:44 PM

S02_1_FIO3H1

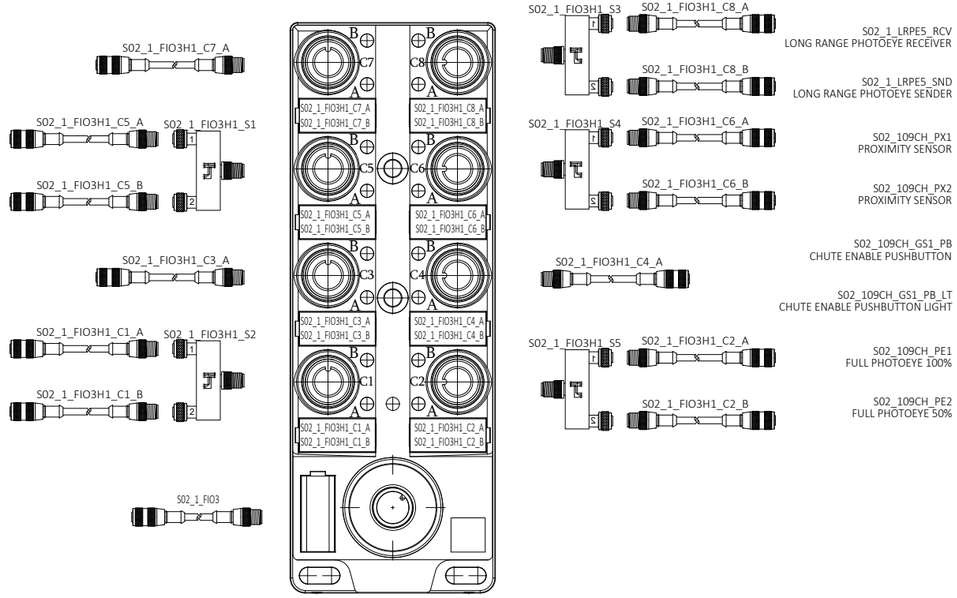

06622.01	S02_1_JR5_PB	JAM RESET PUSHBUTTON
06622.02	S02_1_JR5_PB_LT	JAM RESET PUSHBUTTON LIGHT
06622.03	S02_111CH_PX1	PROXIMITY SENSOR
06622.04	S02_111CH_PX2	PROXIMITY SENSOR
06622.05	S02_111CH_GS1_PB	CHUTE ENABLE PUSHBUTTON
06622.06	S02_111CH_GS1_PB_LT	CHUTE ENABLE PUSHBUTTON LIGHT
06622.07	S02_111CH_PE1	FULL PHOTOEYE 100%
06622.08	S02_111CH_PE2	FULL PHOTOEYE 50%
06622.09		
06622.10		

S02_1_FIO3H1_S3	S02_1_FIO3H1_C8_A	S02_1_LRPE5_RCV LONG RANGE PHOTOEYE RECEIVER
	S02_1_FIO3H1_C8_B	S02_1_LRPE5_SND LONG RANGE PHOTOEYE SENDER
S02_1_FIO3H1_S4	S02_1_FIO3H1_C6_A	S02_109CH_PX1 PROXIMITY SENSOR
	S02_1_FIO3H1_C6_B	S02_109CH_PX2 PROXIMITY SENSOR
	S02_1_FIO3H1_C4_A	S02_109CH_GS1_PB CHUTE ENABLE PUSHBUTTON
		S02_109CH_GS1_PB_LT CHUTE ENABLE PUSHBUTTON LIGHT
S02_1_FIO3H1_S5	S02_1_FIO3H1_C2_A	S02_109CH_PE1 FULL PHOTOEYE 100%
	S02_1_FIO3H1_C2_B	S02_109CH_PE2 FULL PHOTOEYE 50%

S02_1_FIO4H1

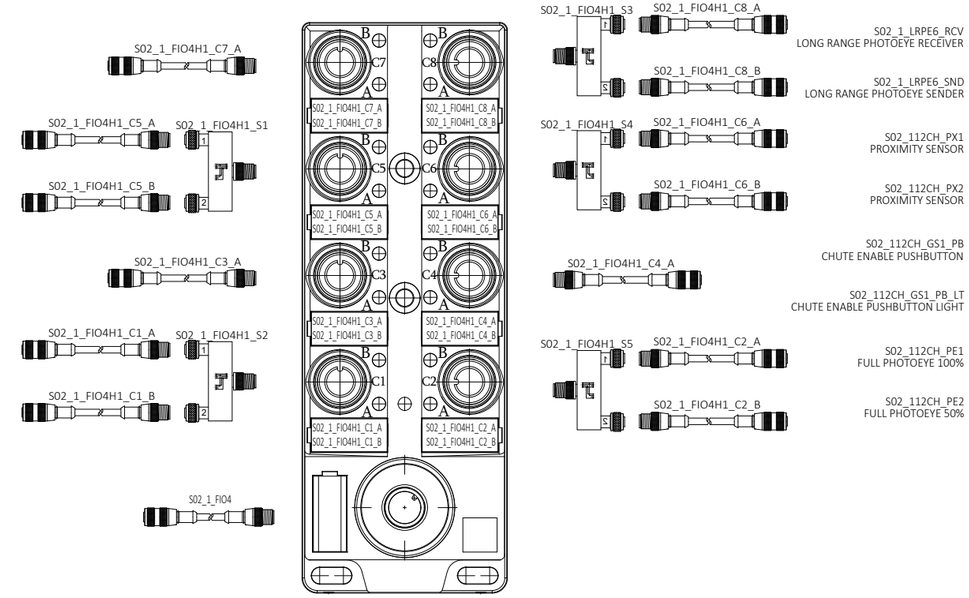

06622.21	S02_1_JR6_PB	JAM RESET PUSHBUTTON
06622.22	S02_1_JR6_PB_LT	JAM RESET PUSHBUTTON LIGHT
06622.23	S02_110CH_PX1	PROXIMITY SENSOR
06622.24	S02_110CH_PX2	PROXIMITY SENSOR
06622.25	S02_110CH_GS1_PB	CHUTE ENABLE PUSHBUTTON
06622.26	S02_110CH_GS1_PB_LT	CHUTE ENABLE PUSHBUTTON LIGHT
06622.27	S02_110CH_PE1	FULL PHOTOEYE 100%
06622.28	S02_110CH_PE2	FULL PHOTOEYE 50%
06622.29		
06622.30		

S02_1_FIO4H1_S3	S02_1_FIO4H1_C8_A	S02_1_LRPE6_RCV LONG RANGE PHOTOEYE RECEIVER
	S02_1_FIO4H1_C8_B	S02_1_LRPE6_SND LONG RANGE PHOTOEYE SENDER
S02_1_FIO4H1_S4	S02_1_FIO4H1_C6_A	S02_112CH_PX1 PROXIMITY SENSOR
	S02_1_FIO4H1_C6_B	S02_112CH_PX2 PROXIMITY SENSOR
	S02_1_FIO4H1_C4_A	S02_112CH_GS1_PB CHUTE ENABLE PUSHBUTTON
		S02_112CH_GS1_PB_LT CHUTE ENABLE PUSHBUTTON LIGHT
S02_1_FIO4H1_S5	S02_1_FIO4H1_C2_A	S02_112CH_PE1 FULL PHOTOEYE 100%
	S02_1_FIO4H1_C2_B	S02_112CH_PE2 FULL PHOTOEYE 50%

S02_1_FIO3H2

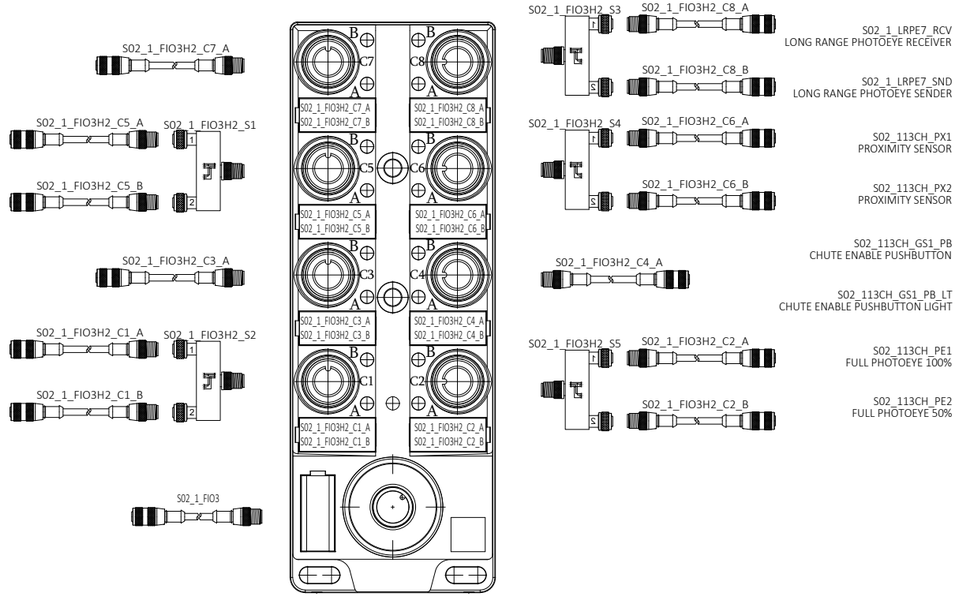

06622.11	S02_1_JR7_PB	JAM RESET PUSHBUTTON
06622.12	S02_1_JR7_PB_LT	JAM RESET PUSHBUTTON LIGHT
06622.13	S02_115CH_PX1	PROXIMITY SENSOR
06622.14	S02_115CH_PX2	PROXIMITY SENSOR
06622.15	S02_115CH_GS1_PB	CHUTE ENABLE PUSHBUTTON
06622.16	S02_115CH_GS1_PB_LT	CHUTE ENABLE PUSHBUTTON LIGHT
06622.17	S02_115CH_PE1	FULL PHOTOEYE 100%
06622.18	S02_115CH_PE2	FULL PHOTOEYE 50%
06622.19		
06622.20		

S02_1_FIO3H2_S3	S02_1_FIO3H2_C8_A	S02_1_LRPE7_RCV LONG RANGE PHOTOEYE RECEIVER
	S02_1_FIO3H2_C8_B	S02_1_LRPE7_SND LONG RANGE PHOTOEYE SENDER
S02_1_FIO3H2_S4	S02_1_FIO3H2_C6_A	S02_113CH_PX1 PROXIMITY SENSOR
	S02_1_FIO3H2_C6_B	S02_113CH_PX2 PROXIMITY SENSOR
	S02_1_FIO3H2_C4_A	S02_113CH_GS1_PB CHUTE ENABLE PUSHBUTTON
		S02_113CH_GS1_PB_LT CHUTE ENABLE PUSHBUTTON LIGHT
S02_1_FIO3H2_S5	S02_1_FIO3H2_C2_A	S02_113CH_PE1 FULL PHOTOEYE 100%
	S02_1_FIO3H2_C2_B	S02_113CH_PE2 FULL PHOTOEYE 50%

S02_1_FIO4H2

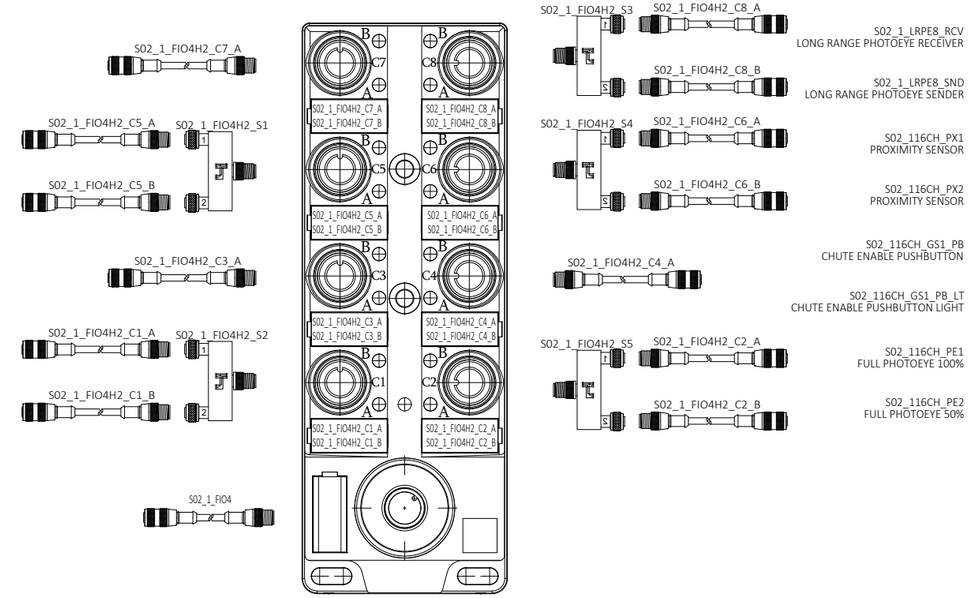

06622.31	S02_1_JR8_PB	JAM RESET PUSHBUTTON
06622.32	S02_1_JR8_PB_LT	JAM RESET PUSHBUTTON LIGHT
06622.33	S02_114CH_PX1	PROXIMITY SENSOR
06622.34	S02_114CH_PX2	PROXIMITY SENSOR
06622.35	S02_114CH_GS1_PB	CHUTE ENABLE PUSHBUTTON
06622.36	S02_114CH_GS1_PB_LT	CHUTE ENABLE PUSHBUTTON LIGHT
06622.37	S02_114CH_PE1	FULL PHOTOEYE 100%
06622.38	S02_114CH_PE2	FULL PHOTOEYE 50%
06622.39		
06622.40		

S02_1_FIO4H2_S3	S02_1_FIO4H2_C8_A	S02_1_LRPE8_RCV LONG RANGE PHOTOEYE RECEIVER
	S02_1_FIO4H2_C8_B	S02_1_LRPE8_SND LONG RANGE PHOTOEYE SENDER
S02_1_FIO4H2_S4	S02_1_FIO4H2_C6_A	S02_116CH_PX1 PROXIMITY SENSOR
	S02_1_FIO4H2_C6_B	S02_116CH_PX2 PROXIMITY SENSOR
	S02_1_FIO4H2_C4_A	S02_116CH_GS1_PB CHUTE ENABLE PUSHBUTTON
		S02_116CH_GS1_PB_LT CHUTE ENABLE PUSHBUTTON LIGHT
S02_1_FIO4H2_S5	S02_1_FIO4H2_C2_A	S02_116CH_PE1 FULL PHOTOEYE 100%
	S02_1_FIO4H2_C2_B	S02_116CH_PE2 FULL PHOTOEYE 50%

DRAWING REVISIONS

REV	DESCRIPTION	DATE	BY
00	INITIAL DRAWINGS	04/25/2025	SK
A	AS-BUILT	11/13/2025	LB

autStand
Automation Standard

CONFIDENTIAL: THE INFORMATION CONTAINED HEREIN IS PROPRIETARY INFORMATION OF AUTOMATION STANDARD LLC AND CONSTITUTES TRADE SECRETS PURSUANT TO THE UNIFORM TRADE SECRETS ACT. THIS INFORMATION SHALL ONLY BE USED IN THE PERFORMANCE OF CONTRACT WITH AUTSTAND. THIS INFORMATION SHALL NOT BE USED, REPRODUCED OR EMPLOYED IN WHOLE PART, EXCEPT WITH AUTSTAND's PRIOR WRITTEN APPROVAL.

25K Amazon Cross-Belt Sort Center (ACBSC)
S02_1_FIO3H1/S02_1_FIO3H2
S02_1_FIO4H1/S02_1_FIO4H2 IO DRAWINGS

AMAZON MTN6
SPARROWS POINT, MD

FILENAME	2429-AMZ-MTN6-MCM06-622
D-SIZE SCALE	NTS
JOB NUMBER:	2429
REVISION	A
SHEET	67

Plotted: 11/21/2025 4:44 PM

S02_1_FIO5H1

06623.01	S02_1_JR9_PB	JAM RESET PUSHBUTTON
06623.02	S02_1_JR9_PB_LT	JAM RESET PUSHBUTTON LIGHT
06623.03	S02_119CH_PX1	PROXIMITY SENSOR
06623.04	S02_119CH_PX2	PROXIMITY SENSOR
06623.05	S02_119CH_GS1_PB	CHUTE ENABLE PUSHBUTTON
06623.06	S02_119CH_GS1_PB_LT	CHUTE ENABLE PUSHBUTTON LIGHT
06623.07	S02_119CH_PE1	FULL PHOTOEYE 100%
06623.08	S02_119CH_PE2	FULL PHOTOEYE 50%
06623.09		
06623.10		

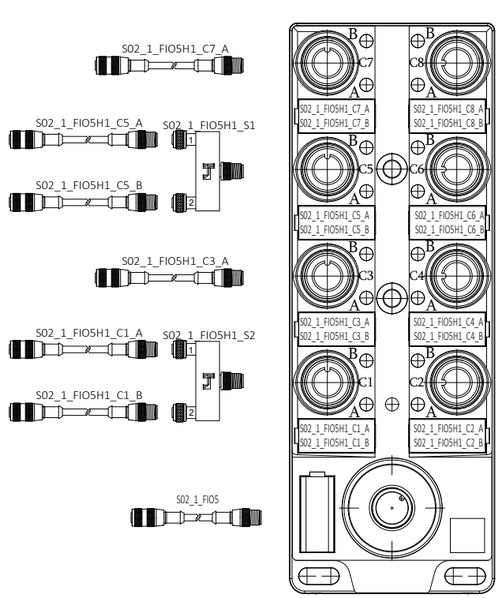

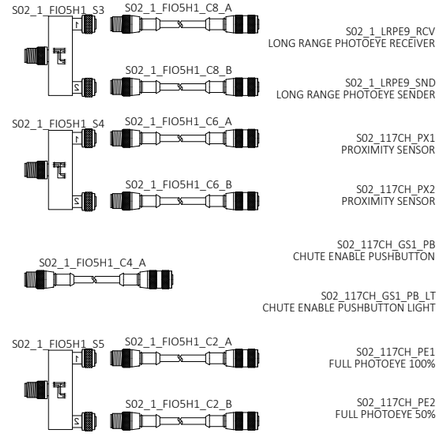

S02_1_LRPE9_RCV	LONG RANGE PHOTOEYE RECEIVER
S02_1_LRPE9_SND	LONG RANGE PHOTOEYE SENDER
S02_117CH_PX1	PROXIMITY SENSOR
S02_117CH_PX2	PROXIMITY SENSOR
S02_117CH_GS1_PB	CHUTE ENABLE PUSHBUTTON
S02_117CH_GS1_PB_LT	CHUTE ENABLE PUSHBUTTON LIGHT
S02_117CH_PE1	FULL PHOTOEYE 100%
S02_117CH_PE2	FULL PHOTOEYE 50%

S02_1_FIO6H1

06623.21	S02_1_JR10_PB	JAM RESET PUSHBUTTON
06623.22	S02_1_JR10_PB_LT	JAM RESET PUSHBUTTON LIGHT
06623.23	S02_118CH_PX1	PROXIMITY SENSOR
06623.24	S02_118CH_PX2	PROXIMITY SENSOR
06623.25	S02_118CH_GS1_PB	CHUTE ENABLE PUSHBUTTON
06623.26	S02_118CH_GS1_PB_LT	CHUTE ENABLE PUSHBUTTON LIGHT
06623.27	S02_118CH_PE1	FULL PHOTOEYE 100%
06623.28	S02_118CH_PE2	FULL PHOTOEYE 50%
06623.29		
06623.30		

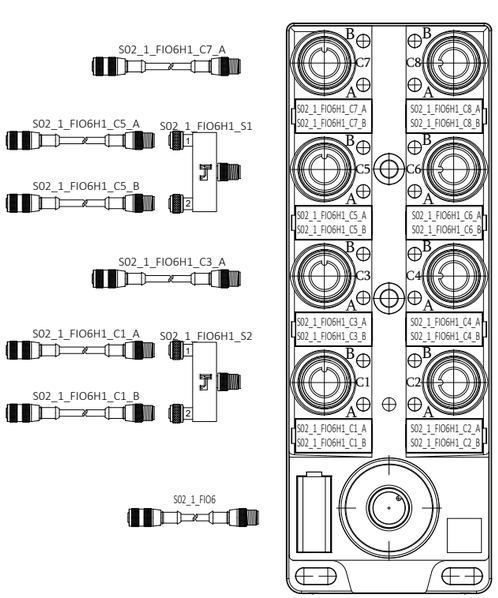

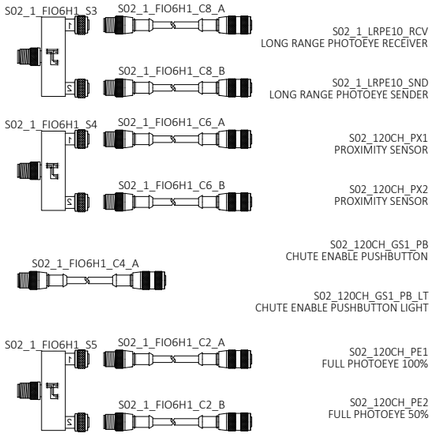

S02_1_LRPE10_RCV	LONG RANGE PHOTOEYE RECEIVER
S02_1_LRPE10_SND	LONG RANGE PHOTOEYE SENDER
S02_120CH_PX1	PROXIMITY SENSOR
S02_120CH_PX2	PROXIMITY SENSOR
S02_120CH_GS1_PB	CHUTE ENABLE PUSHBUTTON
S02_120CH_GS1_PB_LT	CHUTE ENABLE PUSHBUTTON LIGHT
S02_120CH_PE1	FULL PHOTOEYE 100%
S02_120CH_PE2	FULL PHOTOEYE 50%

S02_1_FIO5H2

06623.11	S02_1_JR11_PB	JAM RESET PUSHBUTTON
06623.12	S02_1_JR11_PB_LT	JAM RESET PUSHBUTTON LIGHT
06623.13	S02_123CH_PX1	PROXIMITY SENSOR
06623.14	S02_123CH_PX2	PROXIMITY SENSOR
06623.15	S02_123CH_GS1_PB	CHUTE ENABLE PUSHBUTTON
06623.16	S02_123CH_GS1_PB_LT	CHUTE ENABLE PUSHBUTTON LIGHT
06623.17	S02_123CH_PE1	FULL PHOTOEYE 100%
06623.18	S02_123CH_PE2	FULL PHOTOEYE 50%
06623.19		
06623.20		

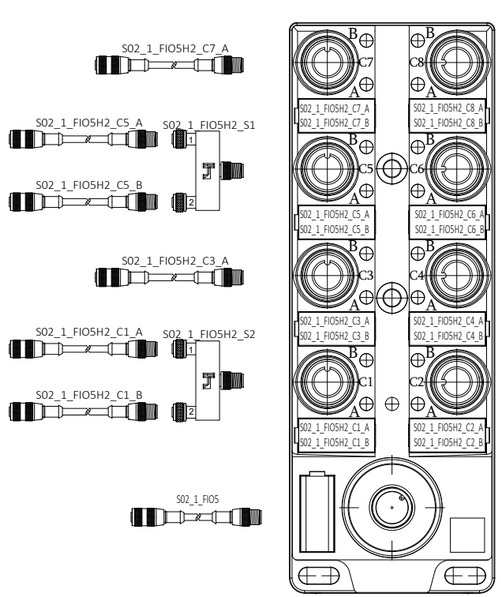

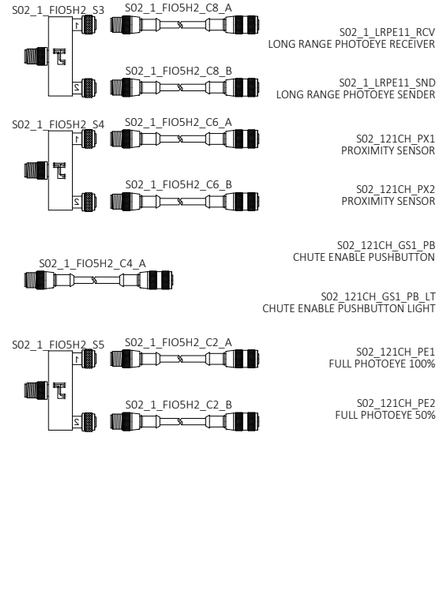

S02_1_LRPE11_RCV	LONG RANGE PHOTOEYE RECEIVER
S02_1_LRPE11_SND	LONG RANGE PHOTOEYE SENDER
S02_121CH_PX1	PROXIMITY SENSOR
S02_121CH_PX2	PROXIMITY SENSOR
S02_121CH_GS1_PB	CHUTE ENABLE PUSHBUTTON
S02_121CH_GS1_PB_LT	CHUTE ENABLE PUSHBUTTON LIGHT
S02_121CH_PE1	FULL PHOTOEYE 100%
S02_121CH_PE2	FULL PHOTOEYE 50%

S02_1_FIO6H2

06623.31	S02_1_JR12_PB	JAM RESET PUSHBUTTON
06623.32	S02_1_JR12_PB_LT	JAM RESET PUSHBUTTON LIGHT
06623.33	S02_122CH_PX1	PROXIMITY SENSOR
06623.34	S02_122CH_PX2	PROXIMITY SENSOR
06623.35	S02_122CH_GS1_PB	CHUTE ENABLE PUSHBUTTON
06623.36	S02_122CH_GS1_PB_LT	CHUTE ENABLE PUSHBUTTON LIGHT
06623.37	S02_122CH_PE1	FULL PHOTOEYE 100%
06623.38	S02_122CH_PE2	FULL PHOTOEYE 50%
06623.39		
06623.40		

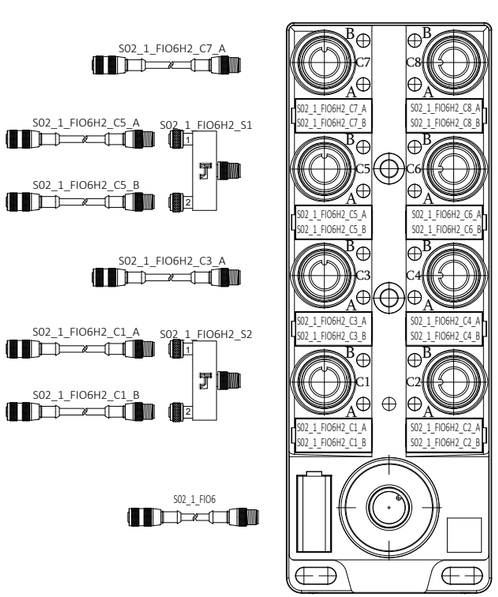

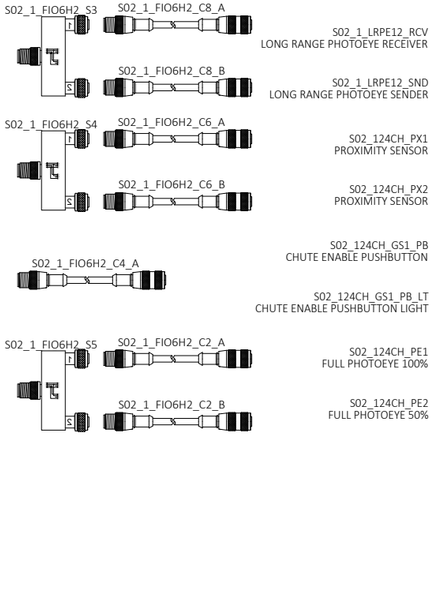

S02_1_LRPE12_RCV	LONG RANGE PHOTOEYE RECEIVER
S02_1_LRPE12_SND	LONG RANGE PHOTOEYE SENDER
S02_124CH_PX1	PROXIMITY SENSOR
S02_124CH_PX2	PROXIMITY SENSOR
S02_124CH_GS1_PB	CHUTE ENABLE PUSHBUTTON
S02_124CH_GS1_PB_LT	CHUTE ENABLE PUSHBUTTON LIGHT
S02_124CH_PE1	FULL PHOTOEYE 100%
S02_124CH_PE2	FULL PHOTOEYE 50%

DRAWING REVISIONS

REV	DESCRIPTION	DATE	BY
00	INITIAL DRAWINGS	04/25/2025	SK
A	AS-BUILT	11/13/2025	LB

autStand
Automation Standard

CONFIDENTIAL: THE INFORMATION CONTAINED HEREIN IS PROPRIETARY INFORMATION OF AUTOMATION STANDARD LLC AND CONSTITUTES TRADE SECRETS PURSUANT TO THE UNIFORM TRADE SECRETS ACT. THIS INFORMATION SHALL ONLY BE USED IN THE PERFORMANCE OF CONTRACT WITH AUTSTAND. THIS INFORMATION SHALL NOT BE USED, REPRODUCED OR EMPLOYED IN WHOLE PART, EXCEPT WITH AUTSTAND's PRIOR WRITTEN APPROVAL.

25K Amazon Cross-Belt Sort Center (ACBSC)
S02_1_FIO5H1/S02_1_FIO5H2
S02_1_FIO6H1/S02_1_FIO6H2 IO DRAWINGS

AMAZON MTN6
SPARROWS POINT, MD

FILENAME	
2429-AMZ-MTN6-MCM06-623	
D-SIZE SCALE	JOB NUMBER:
NTS	2429
REVISION	SHEET
A	68

Plotted: 11/21/2025 4:44 PM

S02_1_FIO7H1

06624.01	S02_1_JR13_PB	JAM RESET PUSHBUTTON
06624.02	S02_1_JR13_PB_LT	JAM RESET PUSHBUTTON LIGHT
06624.03	S02_127CH_PX1	PROXIMITY SENSOR
06624.04	S02_127CH_PX2	PROXIMITY SENSOR
06624.05	S02_127CH_GS1_PB	CHUTE ENABLE PUSHBUTTON
06624.06	S02_127CH_GS1_PB_LT	CHUTE ENABLE PUSHBUTTON LIGHT
06624.07	S02_127CH_PE1	FULL PHOTOEYE 100%
06624.08	S02_127CH_PE2	FULL PHOTOEYE 50%
06624.09		
06624.10		

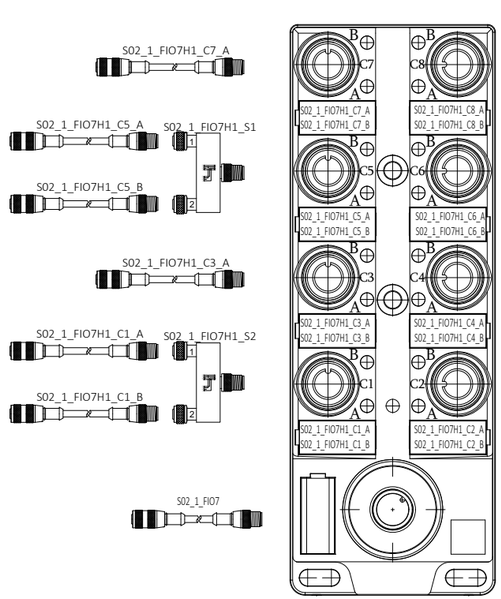

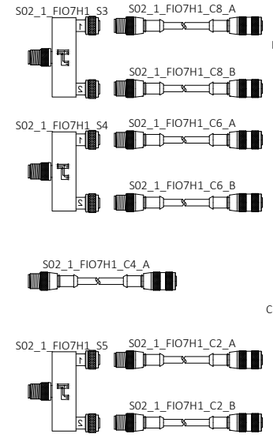

	S02_1_LRPE13_RCV	LONG RANGE PHOTOEYE RECEIVER
	S02_1_LRPE13_SND	LONG RANGE PHOTOEYE SENDER
	S02_125CH_PX1	PROXIMITY SENSOR
	S02_125CH_PX2	PROXIMITY SENSOR
	S02_125CH_GS1_PB	CHUTE ENABLE PUSHBUTTON
	S02_125CH_GS1_PB_LT	CHUTE ENABLE PUSHBUTTON LIGHT
	S02_125CH_PE1	FULL PHOTOEYE 100%
	S02_125CH_PE2	FULL PHOTOEYE 50%

S02_1_FIO8H1

06624.21	S02_1_JR14_PB	JAM RESET PUSHBUTTON
06624.22	S02_1_JR14_PB_LT	JAM RESET PUSHBUTTON LIGHT
06624.23	S02_126CH_PX1	PROXIMITY SENSOR
06624.24	S02_126CH_PX2	PROXIMITY SENSOR
06624.25	S02_126CH_GS1_PB	CHUTE ENABLE PUSHBUTTON
06624.26	S02_126CH_GS1_PB_LT	CHUTE ENABLE PUSHBUTTON LIGHT
06624.27	S02_126CH_PE1	FULL PHOTOEYE 100%
06624.28	S02_126CH_PE2	FULL PHOTOEYE 50%
06624.29		
06624.30		

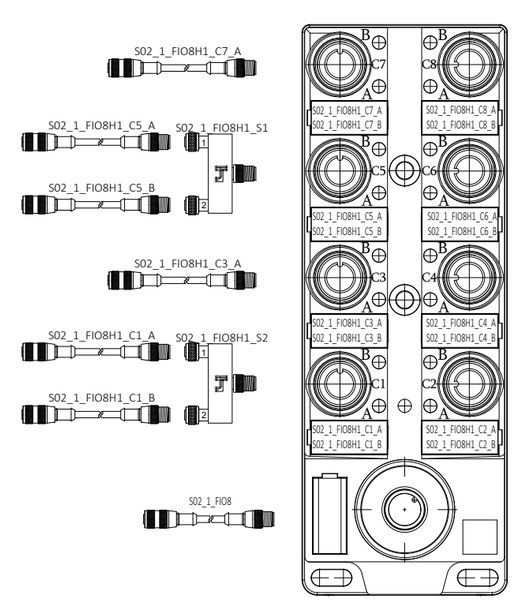

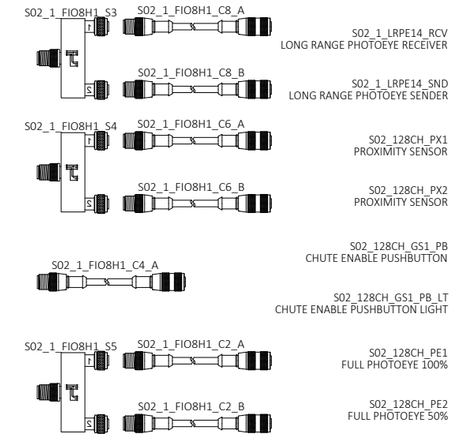

	S02_1_LRPE14_RCV	LONG RANGE PHOTOEYE RECEIVER
	S02_1_LRPE14_SND	LONG RANGE PHOTOEYE SENDER
	S02_128CH_PX1	PROXIMITY SENSOR
	S02_128CH_PX2	PROXIMITY SENSOR
	S02_128CH_GS1_PB	CHUTE ENABLE PUSHBUTTON
	S02_128CH_GS1_PB_LT	CHUTE ENABLE PUSHBUTTON LIGHT
	S02_128CH_PE1	FULL PHOTOEYE 100%
	S02_128CH_PE2	FULL PHOTOEYE 50%

S02_1_FIO7H2

06624.11	SPARE	
06624.12	SPARE	
06624.13	SPARE	
06624.14	SPARE	
06624.15	SPARE	
06624.16	SPARE	
06624.17	SPARE	
06624.18	SPARE	
06624.19		
06624.20		

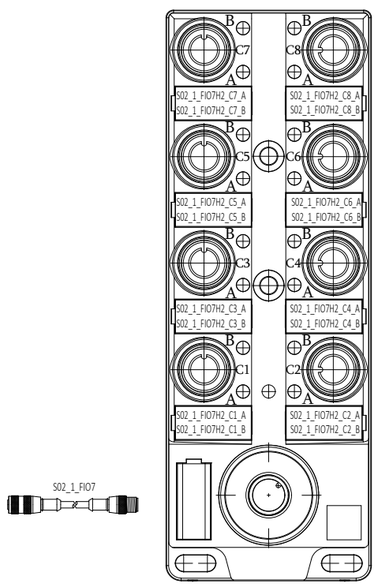

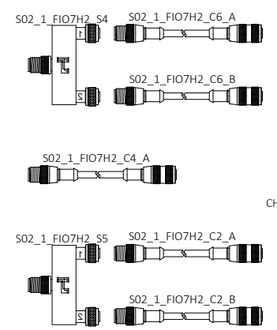

	SPARE	
	SPARE	
	S02_129CH_PX1	PROXIMITY SENSOR
	S02_129CH_PX2	PROXIMITY SENSOR
	S02_129CH_GS1_PB	CHUTE ENABLE PUSHBUTTON
	S02_129CH_GS1_PB_LT	CHUTE ENABLE PUSHBUTTON LIGHT
	S02_129CH_PE1	FULL PHOTOEYE 100%
	S02_129CH_PE2	FULL PHOTOEYE 50%

S02_1_FIO8H2

06624.31	SPARE	
06624.32	SPARE	
06624.33	S02_130CH_PX1	PROXIMITY SENSOR
06624.34	S02_130CH_PX2	PROXIMITY SENSOR
06624.35	S02_130CH_GS1_PB	CHUTE ENABLE PUSHBUTTON
06624.36	S02_130CH_GS1_PB_LT	CHUTE ENABLE PUSHBUTTON LIGHT
06624.37	S02_130CH_PE1	FULL PHOTOEYE 100%
06624.38	S02_130CH_PE2	FULL PHOTOEYE 50%
06624.39		
06624.40		

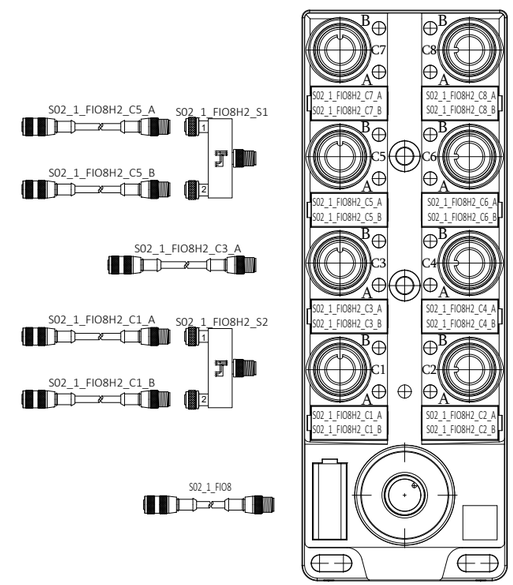

	SPARE	
	SPARE	
	SPARE	
	SPARE	
	SPARE	
	SPARE	
	SPARE	
	SPARE	

DRAWING REVISIONS

REV	DESCRIPTION	DATE	BY
00	INITIAL DRAWINGS	04/25/2025	SK
A	AS-BUILT	11/13/2025	LB

autStand
Automation Standard

CONFIDENTIAL: THE INFORMATION CONTAINED HEREIN IS PROPRIETARY INFORMATION OF AUTOMATION STANDARD LLC AND CONSTITUTES TRADE SECRETS PURSUANT TO THE UNIFORM TRADE SECRETS ACT. THIS INFORMATION SHALL ONLY BE USED IN THE PERFORMANCE OF CONTRACT WITH AUTSTAND. THIS INFORMATION SHALL NOT BE USED, REPRODUCED OR EMPLOYED IN WHOLE PART, EXCEPT WITH AUTSTAND'S PRIOR WRITTEN APPROVAL.

25K Amazon Cross-Belt Sort Center (ACBSC)
S02_1_FIO7H1/S02_1_FIO7H2
S02_1_FIO8H1/S02_1_FIO8H2 IO DRAWINGS

AMAZON MTN6
SPARROWS POINT, MD

FILENAME	
2429-AMZ-MTN6-MCM06-624	
D-SIZE SCALE	JOB NUMBER:
NTS	2429
REVISION	SHEET
A	69

Plotted: 11/21/2025 4:44 PM

S02_2_FIO1H1

06625.01	S02_2_JR1_PB	JAM RESET PUSHBUTTON
06625.02	S02_2_JR1_PB_LT	JAM RESET PUSHBUTTON LIGHT
06625.03	S02_203CH_PX1	PROXIMITY SENSOR
06625.04	S02_203CH_PX2	PROXIMITY SENSOR
06625.05	S02_203CH_GS1_PB	CHUTE ENABLE PUSHBUTTON
06625.06	S02_203CH_GS1_PB_LT	CHUTE ENABLE PUSHBUTTON LIGHT
06625.07	S02_203CH_PE1	FULL PHOTOEYE 100%
06625.08	S02_203CH_PE2	FULL PHOTOEYE 50%
06625.09		
06625.10		

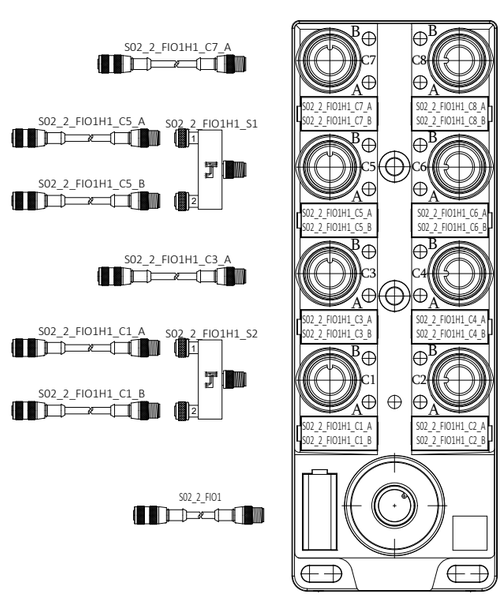

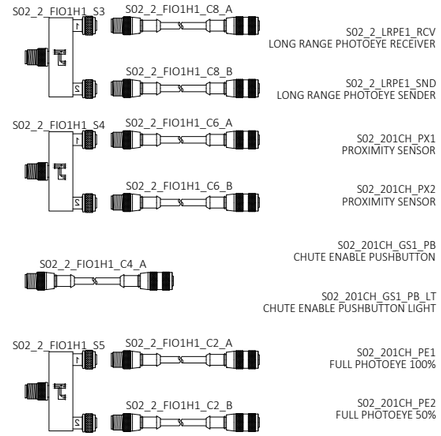

S02_2_LRPE1_RCV	LONG RANGE PHOTOEYE RECEIVER
S02_2_LRPE1_SND	LONG RANGE PHOTOEYE SENDER
S02_201CH_PX1	PROXIMITY SENSOR
S02_201CH_PX2	PROXIMITY SENSOR
S02_201CH_GS1_PB	CHUTE ENABLE PUSHBUTTON
S02_201CH_GS1_PB_LT	CHUTE ENABLE PUSHBUTTON LIGHT
S02_201CH_PE1	FULL PHOTOEYE 100%
S02_201CH_PE2	FULL PHOTOEYE 50%

S02_2_FIO2H1

06625.21	S02_2_JR2_PB	JAM RESET PUSHBUTTON
06625.22	S02_2_JR2_PB_LT	JAM RESET PUSHBUTTON
06625.23	S02_202CH_PX1	PROXIMITY SENSOR
06625.24	S02_202CH_PX2	PROXIMITY SENSOR
06625.25	S02_202CH_GS1_PB	CHUTE ENABLE PUSHBUTTON
06625.26	S02_202CH_GS1_PB_LT	CHUTE ENABLE PUSHBUTTON LIGHT
06625.27	S02_202CH_PE1	FULL PHOTOEYE 100%
06625.28	S02_202CH_PE2	FULL PHOTOEYE 50%
06625.29		
06625.30		

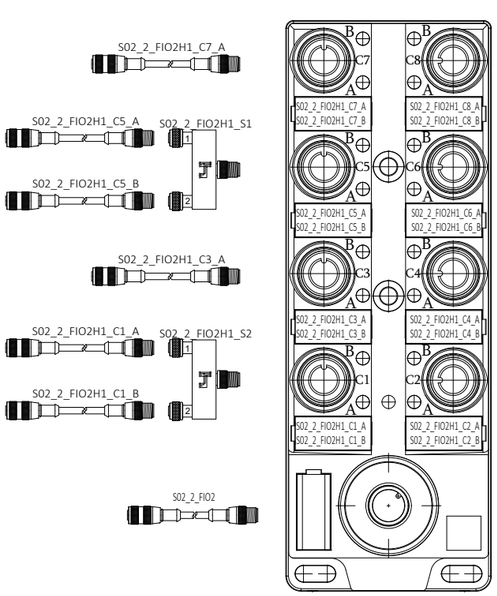

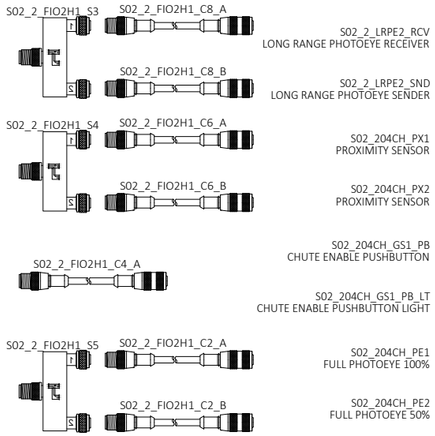

S02_2_LRPE2_RCV	LONG RANGE PHOTOEYE RECEIVER
S02_2_LRPE2_SND	LONG RANGE PHOTOEYE SENDER
S02_204CH_PX1	PROXIMITY SENSOR
S02_204CH_PX2	PROXIMITY SENSOR
S02_204CH_GS1_PB	CHUTE ENABLE PUSHBUTTON
S02_204CH_GS1_PB_LT	CHUTE ENABLE PUSHBUTTON LIGHT
S02_204CH_PE1	FULL PHOTOEYE 100%
S02_204CH_PE2	FULL PHOTOEYE 50%

S02_2_FIO1H2

06625.11	S02_2_JR3_PB	JAM RESET PUSHBUTTON
06625.12	S02_2_JR3_PB_LT	JAM RESET PUSHBUTTON LIGHT
06625.13	S02_207CH_PX1	PROXIMITY SENSOR
06625.14	S02_207CH_PX2	PROXIMITY SENSOR
06625.15	S02_207CH_GS1_PB	CHUTE ENABLE PUSHBUTTON
06625.16	S02_207CH_GS1_PB_LT	CHUTE ENABLE PUSHBUTTON LIGHT
06625.17	S02_207CH_PE1	FULL PHOTOEYE 100%
06625.18	S02_207CH_PE2	FULL PHOTOEYE 50%
06625.19		
06625.20		

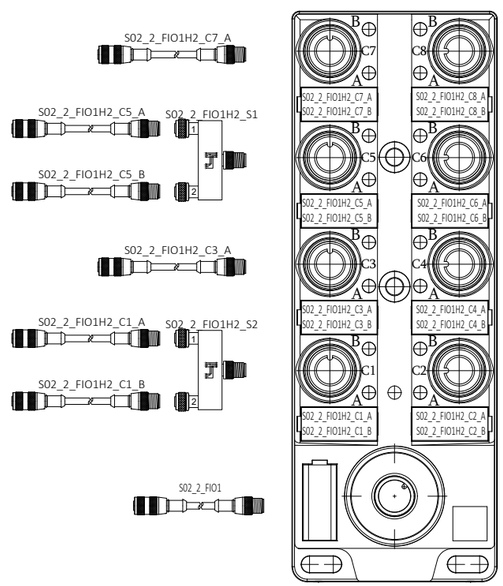

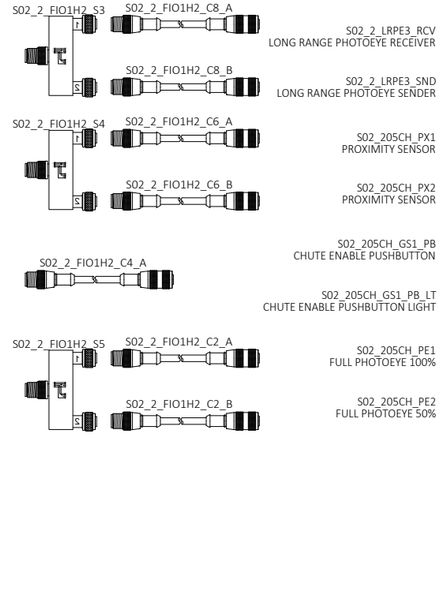

S02_2_LRPE3_RCV	LONG RANGE PHOTOEYE RECEIVER
S02_2_LRPE3_SND	LONG RANGE PHOTOEYE SENDER
S02_205CH_PX1	PROXIMITY SENSOR
S02_205CH_PX2	PROXIMITY SENSOR
S02_205CH_GS1_PB	CHUTE ENABLE PUSHBUTTON
S02_205CH_GS1_PB_LT	CHUTE ENABLE PUSHBUTTON LIGHT
S02_205CH_PE1	FULL PHOTOEYE 100%
S02_205CH_PE2	FULL PHOTOEYE 50%

S02_2_FIO2H2

06625.31	S02_2_JR4_PB	JAM RESET PUSHBUTTON
06625.32	S02_2_JR4_PB_LT	JAM RESET PUSHBUTTON LIGHT
06625.33	S02_206CH_PX1	PROXIMITY SENSOR
06625.34	S02_206CH_PX2	PROXIMITY SENSOR
06625.35	S02_206CH_GS1_PB	CHUTE ENABLE PUSHBUTTON
06625.36	S02_206CH_GS1_PB_LT	CHUTE ENABLE PUSHBUTTON LIGHT
06625.37	S02_206CH_PE1	FULL PHOTOEYE 100%
06625.38	S02_206CH_PE2	FULL PHOTOEYE 50%
06625.39		
06625.40		

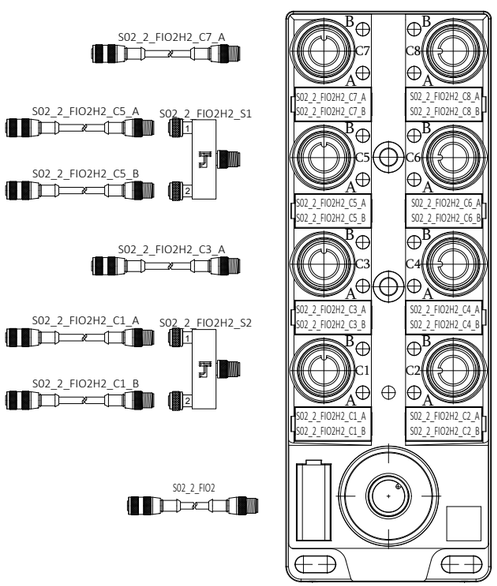

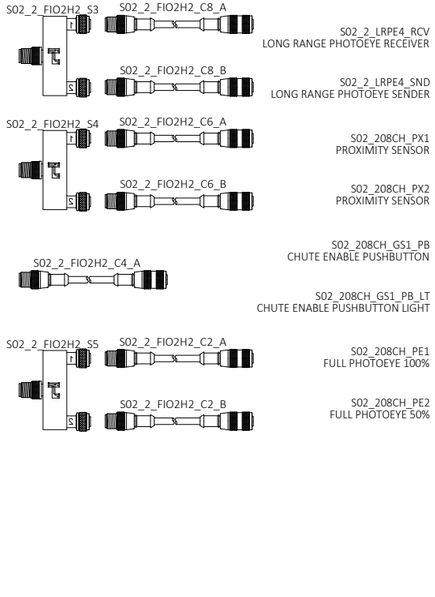

S02_2_LRPE4_RCV	LONG RANGE PHOTOEYE RECEIVER
S02_2_LRPE4_SND	LONG RANGE PHOTOEYE SENDER
S02_208CH_PX1	PROXIMITY SENSOR
S02_208CH_PX2	PROXIMITY SENSOR
S02_208CH_GS1_PB	CHUTE ENABLE PUSHBUTTON
S02_208CH_GS1_PB_LT	CHUTE ENABLE PUSHBUTTON LIGHT
S02_208CH_PE1	FULL PHOTOEYE 100%
S02_208CH_PE2	FULL PHOTOEYE 50%

DRAWING REVISIONS

REV	DESCRIPTION	DATE	BY
00	INITIAL DRAWINGS	04/25/2025	SK
A	AS-BUILT	11/13/2025	LB

autStand Automation Standard

CONFIDENTIAL: THE INFORMATION CONTAINED HEREIN IS PROPRIETARY INFORMATION OF AUTOMATION STANDARD LLC AND CONSTITUTES TRADE SECRETS PURSUANT TO THE UNIFORM TRADE SECRETS ACT. THIS INFORMATION SHALL ONLY BE USED IN THE PERFORMANCE OF CONTRACT WITH AUTSTAND. THIS INFORMATION SHALL NOT BE USED, REPRODUCED OR EMPLOYED IN WHOLE PART, EXCEPT WITH AUTSTAND's PRIOR WRITTEN APPROVAL.

25K Amazon Cross-Belt Sort Center (ACBSC)
S02_2_FIO1H1/S02_2_FIO1H2
S02_2_FIO2H1/S02_2_FIO2H2 IO DRAWINGS

AMAZON MTN6
SPARROWS POINT, MD

FILENAME	
2429-AMZ-MTN6-MCM06-625	
D-SIZE SCALE	JOB NUMBER:
NTS	2429
REVISION	SHEET
A	70

Plotted: 11/21/2025 4:44 PM

S02_2_FIO3H1

06626.01 S02_2_JR5_PB
JAM RESET PUSHBUTTON

06626.02 S02_2_JR5_PB_LT
JAM RESET PUSHBUTTON LIGHT

06626.03 S02_211CH_PX1
PROXIMITY SENSOR

06626.04 S02_211CH_PX2
PROXIMITY SENSOR

06626.05 S02_211CH_GS1_PB
CHUTE ENABLE PUSHBUTTON

06626.06 S02_211CH_GS1_PB_LT
CHUTE ENABLE PUSHBUTTON LIGHT

06626.07 S02_211CH_PE1
FULL PHOTOEYE 100%

06626.08 S02_211CH_PE2
FULL PHOTOEYE 50%

06626.09

06626.10

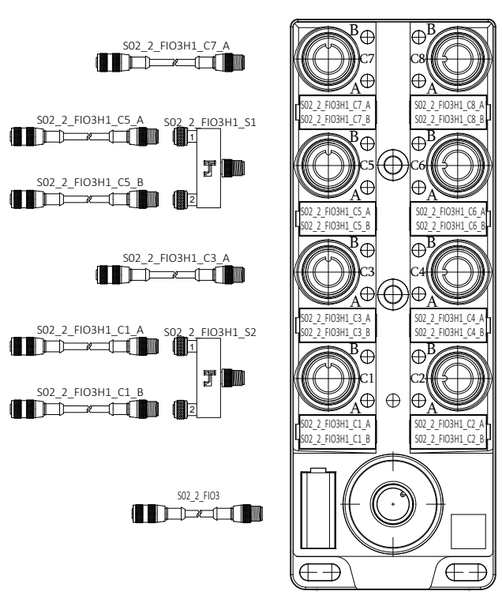

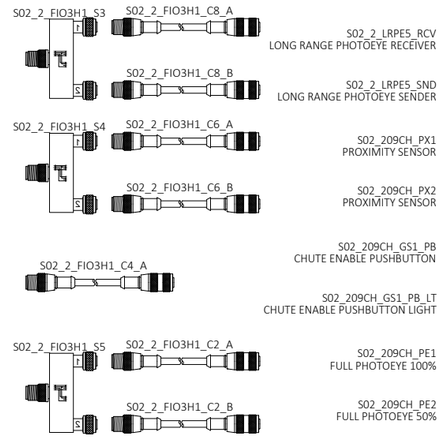

S02_2_LRPE5_RCV
LONG RANGE PHOTOEYE RECEIVER

S02_2_LRPE5_SND
LONG RANGE PHOTOEYE SENDER

S02_209CH_PX1
PROXIMITY SENSOR

S02_209CH_PX2
PROXIMITY SENSOR

S02_209CH_GS1_PB
CHUTE ENABLE PUSHBUTTON

S02_209CH_GS1_PB_LT
CHUTE ENABLE PUSHBUTTON LIGHT

S02_209CH_PE1
FULL PHOTOEYE 100%

S02_209CH_PE2
FULL PHOTOEYE 50%

S02_2_FIO4H1

06626.21 S02_2_JR6_PB
JAM RESET PUSHBUTTON

06626.22 S02_2_JR6_PB_LT
JAM RESET PUSHBUTTON LIGHT

06626.23 S02_210CH_PX1
PROXIMITY SENSOR

06626.24 S02_210CH_PX2
PROXIMITY SENSOR

06626.25 S02_210CH_GS1_PB
CHUTE ENABLE PUSHBUTTON

06626.26 S02_210CH_GS1_PB_LT
CHUTE ENABLE PUSHBUTTON LIGHT

06626.27 S02_210CH_PE1
FULL PHOTOEYE 100%

06626.28 S02_210CH_PE2
FULL PHOTOEYE 50%

06626.29

06626.30

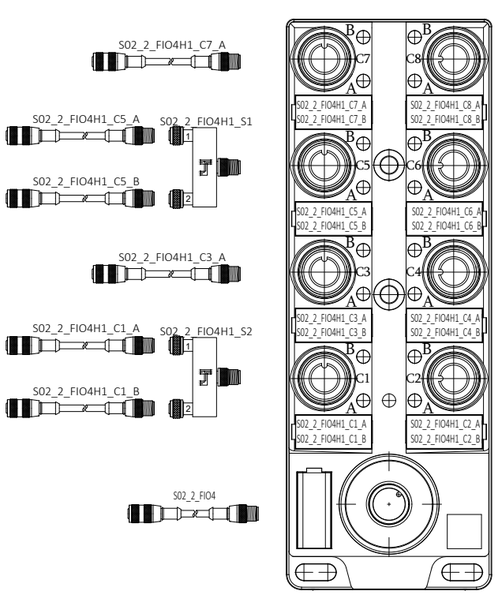

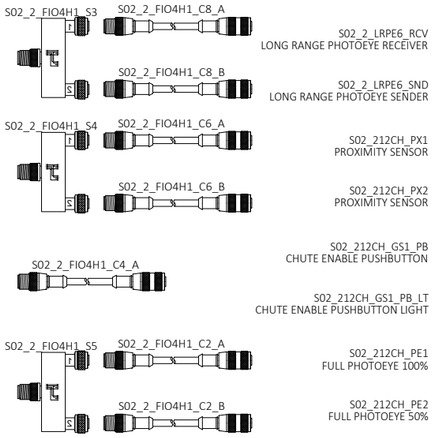

S02_2_LRPE6_RCV
LONG RANGE PHOTOEYE RECEIVER

S02_2_LRPE6_SND
LONG RANGE PHOTOEYE SENDER

S02_212CH_PX1
PROXIMITY SENSOR

S02_212CH_PX2
PROXIMITY SENSOR

S02_212CH_GS1_PB
CHUTE ENABLE PUSHBUTTON

S02_212CH_GS1_PB_LT
CHUTE ENABLE PUSHBUTTON LIGHT

S02_212CH_PE1
FULL PHOTOEYE 100%

S02_212CH_PE2
FULL PHOTOEYE 50%

S02_2_FIO3H2

06626.11 S02_2_JR7_PB
JAM RESET PUSHBUTTON

06626.12 S02_2_JR7_PB_LT
JAM RESET PUSHBUTTON LIGHT

06626.13 S02_215CH_PX1
PROXIMITY SENSOR

06626.14 S02_215CH_PX2
PROXIMITY SENSOR

06626.15 S02_215CH_GS1_PB
CHUTE ENABLE PUSHBUTTON

06626.16 S02_215CH_GS1_PB_LT
CHUTE ENABLE PUSHBUTTON LIGHT

06626.17 S02_215CH_PE1
FULL PHOTOEYE 100%

06626.18 S02_215CH_PE2
FULL PHOTOEYE 50%

06626.19

06626.20

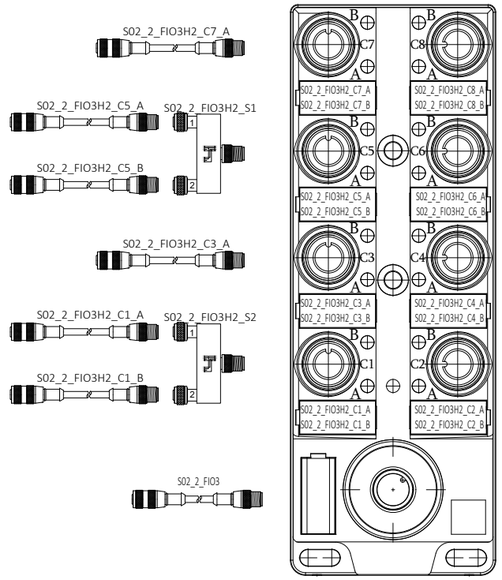

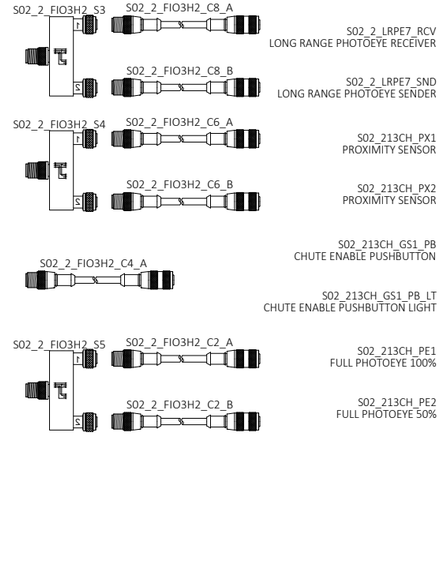

S02_2_LRPE7_RCV
LONG RANGE PHOTOEYE RECEIVER

S02_2_LRPE7_SND
LONG RANGE PHOTOEYE SENDER

S02_213CH_PX1
PROXIMITY SENSOR

S02_213CH_PX2
PROXIMITY SENSOR

S02_213CH_GS1_PB
CHUTE ENABLE PUSHBUTTON

S02_213CH_GS1_PB_LT
CHUTE ENABLE PUSHBUTTON LIGHT

S02_213CH_PE1
FULL PHOTOEYE 100%

S02_213CH_PE2
FULL PHOTOEYE 50%

S02_2_FIO4H2

06626.31 S02_2_JR8_PB
JAM RESET PUSHBUTTON

06626.32 S02_2_JR8_PB_LT
JAM RESET PUSHBUTTON LIGHT

06626.33 S02_214CH_PX1
PROXIMITY SENSOR

06626.34 S02_214CH_PX2
PROXIMITY SENSOR

06626.35 S02_214CH_GS1_PB
CHUTE ENABLE PUSHBUTTON

06626.36 S02_214CH_GS1_PB_LT
CHUTE ENABLE PUSHBUTTON LIGHT

06626.37 S02_214CH_PE1
FULL PHOTOEYE 100%

06626.38 S02_214CH_PE2
FULL PHOTOEYE 50%

06626.39

06626.40

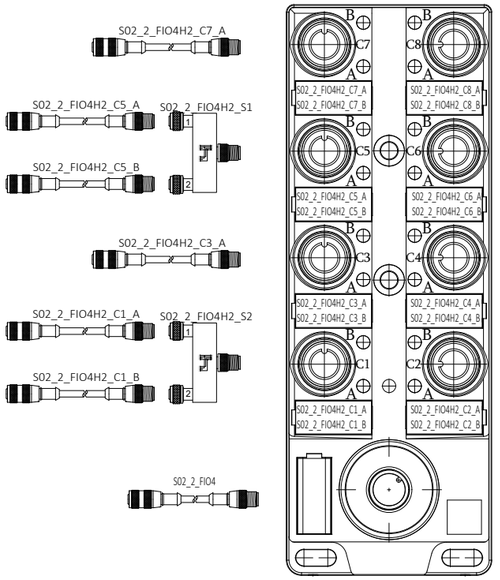

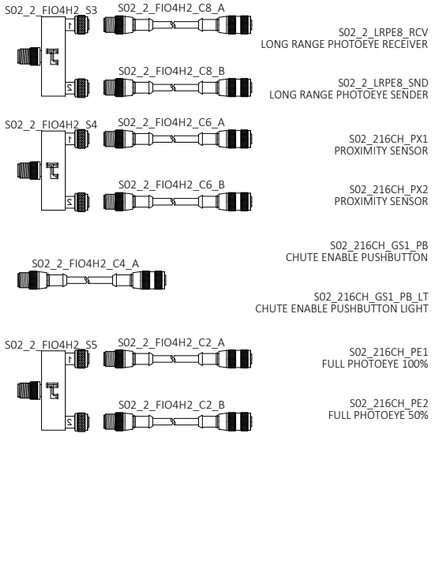

S02_2_LRPE8_RCV
LONG RANGE PHOTOEYE RECEIVER

S02_2_LRPE8_SND
LONG RANGE PHOTOEYE SENDER

S02_216CH_PX1
PROXIMITY SENSOR

S02_216CH_PX2
PROXIMITY SENSOR

S02_216CH_GS1_PB
CHUTE ENABLE PUSHBUTTON

S02_216CH_GS1_PB_LT
CHUTE ENABLE PUSHBUTTON LIGHT

S02_216CH_PE1
FULL PHOTOEYE 100%

S02_216CH_PE2
FULL PHOTOEYE 50%

DRAWING REVISIONS

REV	DESCRIPTION	DATE	BY
00	INITIAL DRAWINGS	04/25/2025	SK
A	AS-BUILT	11/13/2025	LB

autStand
Automation Standard

CONFIDENTIAL: THE INFORMATION CONTAINED HEREIN IS PROPRIETARY INFORMATION OF AUTOMATION STANDARD LLC AND CONSTITUTES TRADE SECRETS PURSUANT TO THE UNIFORM TRADE SECRETS ACT. THIS INFORMATION SHALL ONLY BE USED IN THE PERFORMANCE OF CONTRACT WITH AUTSTAND. THIS INFORMATION SHALL NOT BE USED, REPRODUCED OR EMPLOYED IN WHOLE PART, EXCEPT WITH AUTSTAND's PRIOR WRITTEN APPROVAL.

25K Amazon Cross-Belt Sort Center (ACBSC)
S02_2_FIO3H1/S02_2_FIO3H2
S02_2_FIO4H1/S02_2_FIO4H2 IO DRAWINGS

AMAZON MTN6
SPARROWS POINT, MD

FILENAME	
2429-AMZ-MTN6-MCM06-626	
D-SIZE SCALE	JOB NUMBER:
NTS	2429
REVISION	SHEET
A	71

Plotted: 11/21/2025 4:44 PM

S02_2_FIO5H1

06627.01	S02_2_JR9_PB JAM RESET PUSHBUTTON
06627.02	S02_2_JR9_PB_LT JAM RESET PUSHBUTTON LIGHT
06627.03	S02_219CH_PX1 PROXIMITY SENSOR
06627.04	S02_219CH_PX2 PROXIMITY SENSOR
06627.05	S02_219CH_GS1_PB CHUTE ENABLE PUSHBUTTON
06627.06	S02_219CH_GS1_PB_LT CHUTE ENABLE PUSHBUTTON LIGHT
06627.07	S02_219CH_PE1 FULL PHOTOEYE 100%
06627.08	S02_219CH_PE2 FULL PHOTOEYE 50%
06627.09	
06627.10	

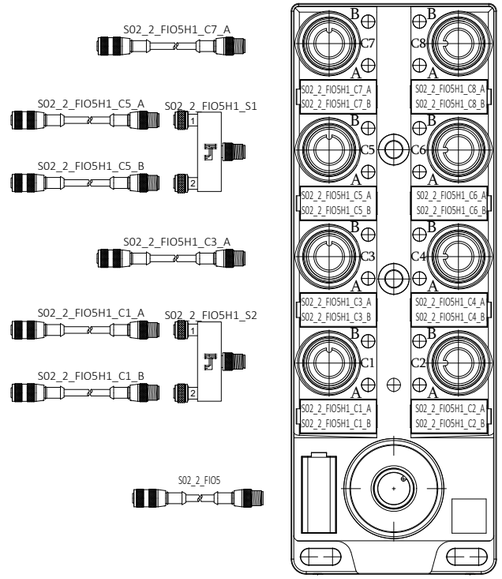

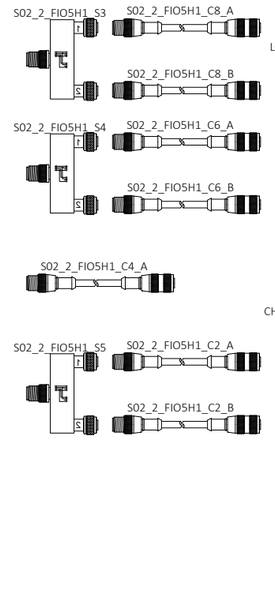

S02_2_LRPE9_RCV LONG RANGE PHOTOEYE RECEIVER	
S02_2_LRPE9_SND LONG RANGE PHOTOEYE SENDER	
S02_217CH_PX1 PROXIMITY SENSOR	
S02_217CH_PX2 PROXIMITY SENSOR	
S02_217CH_GS1_PB CHUTE ENABLE PUSHBUTTON	
S02_217CH_GS1_PB_LT CHUTE ENABLE PUSHBUTTON LIGHT	
S02_217CH_PE1 FULL PHOTOEYE 100%	
S02_217CH_PE2 FULL PHOTOEYE 50%	

S02_2_FIO6H1

06627.21	S02_2_JR10_PB JAM RESET PUSHBUTTON
06627.22	S02_2_JR10_PB_LT JAM RESET PUSHBUTTON LIGHT
06627.23	S02_218CH_PX1 PROXIMITY SENSOR
06627.24	S02_218CH_PX2 PROXIMITY SENSOR
06627.25	S02_218CH_GS1_PB CHUTE ENABLE PUSHBUTTON
06627.26	S02_218CH_GS1_PB_LT CHUTE ENABLE PUSHBUTTON LIGHT
06627.27	S02_218CH_PE1 FULL PHOTOEYE 100%
06627.28	S02_218CH_PE2 FULL PHOTOEYE 50%
06627.29	
06627.30	

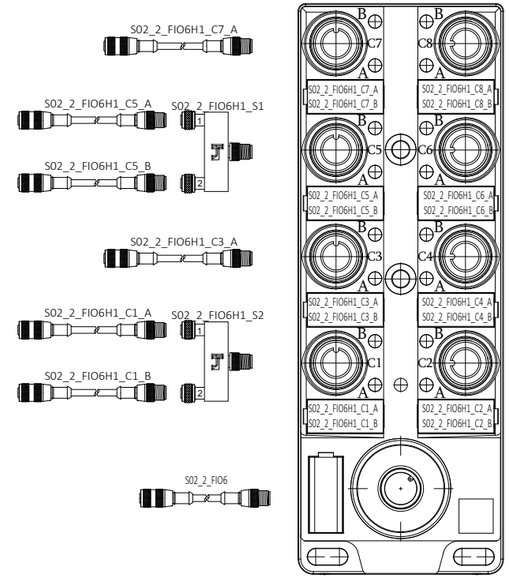

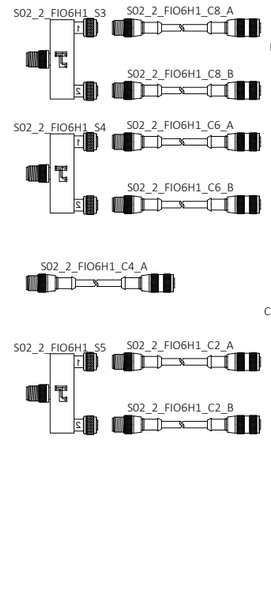

S02_2_LRPE10_RCV LONG RANGE PHOTOEYE RECEIVER	
S02_2_LRPE10_SND LONG RANGE PHOTOEYE SENDER	
S02_220CH_PX1 PROXIMITY SENSOR	
S02_220CH_PX2 PROXIMITY SENSOR	
S02_220CH_GS1_PB CHUTE ENABLE PUSHBUTTON	
S02_220CH_GS1_PB_LT CHUTE ENABLE PUSHBUTTON LIGHT	
S02_220CH_PE1 FULL PHOTOEYE 100%	
S02_220CH_PE2 FULL PHOTOEYE 50%	

S02_2_FIO5H2

06627.11	S02_2_JR11_PB JAM RESET PUSHBUTTON
06627.12	S02_2_JR11_PB_LT JAM RESET PUSHBUTTON LIGHT
06627.13	S02_223CH_PX1 PROXIMITY SENSOR
06627.14	S02_223CH_PX2 PROXIMITY SENSOR
06627.15	S02_223CH_GS1_PB CHUTE ENABLE PUSHBUTTON
06627.16	S02_223CH_GS1_PB_LT CHUTE ENABLE PUSHBUTTON LIGHT
06627.17	S02_223CH_PE1 FULL PHOTOEYE 100%
06627.18	S02_223CH_PE2 FULL PHOTOEYE 50%
06627.19	
06627.20	

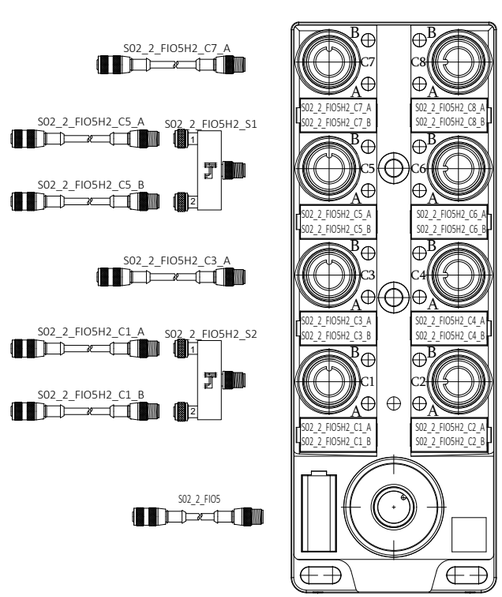

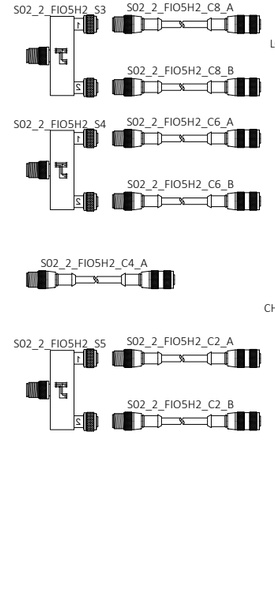

S02_2_LRPE11_RCV LONG RANGE PHOTOEYE RECEIVER	
S02_2_LRPE11_SND LONG RANGE PHOTOEYE SENDER	
S02_221CH_PX1 PROXIMITY SENSOR	
S02_221CH_PX2 PROXIMITY SENSOR	
S02_221CH_GS1_PB CHUTE ENABLE PUSHBUTTON	
S02_221CH_GS1_PB_LT CHUTE ENABLE PUSHBUTTON LIGHT	
S02_221CH_PE1 FULL PHOTOEYE 100%	
S02_221CH_PE2 FULL PHOTOEYE 50%	

S02_2_FIO6H2

06627.31	S02_2_JR12_PB JAM RESET PUSHBUTTON
06627.32	S02_2_JR12_PB_LT JAM RESET PUSHBUTTON LIGHT
06627.33	S02_222CH_PX1 PROXIMITY SENSOR
06627.34	S02_222CH_PX2 PROXIMITY SENSOR
06627.35	S02_222CH_GS1_PB CHUTE ENABLE PUSHBUTTON
06627.36	S02_222CH_GS1_PB_LT CHUTE ENABLE PUSHBUTTON LIGHT
06627.37	S02_222CH_PE1 FULL PHOTOEYE 100%
06627.38	S02_222CH_PE2 FULL PHOTOEYE 50%
06627.39	
06627.40	

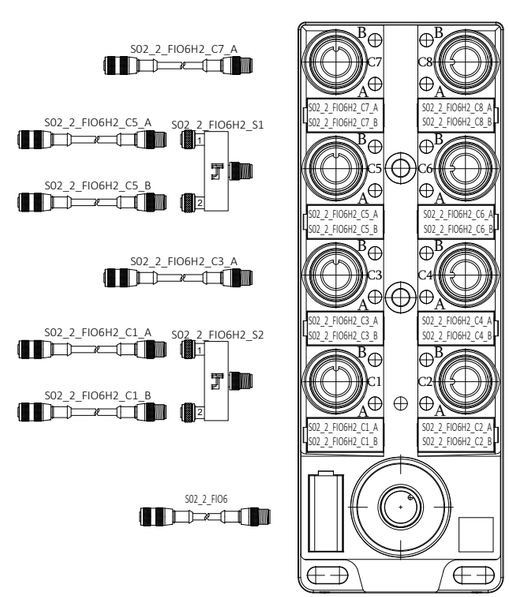

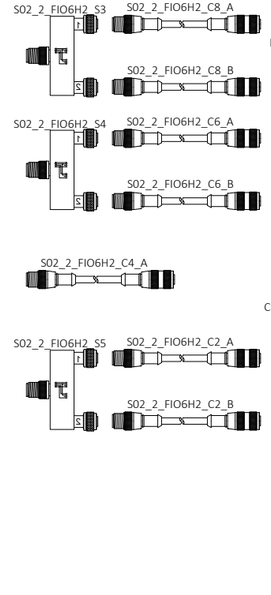

S02_2_LRPE12_RCV LONG RANGE PHOTOEYE RECEIVER	
S02_2_LRPE12_SND LONG RANGE PHOTOEYE SENDER	
S02_224CH_PX1 PROXIMITY SENSOR	
S02_224CH_PX2 PROXIMITY SENSOR	
S02_224CH_GS1_PB CHUTE ENABLE PUSHBUTTON	
S02_224CH_GS1_PB_LT CHUTE ENABLE PUSHBUTTON LIGHT	
S02_224CH_PE1 FULL PHOTOEYE 100%	
S02_224CH_PE2 FULL PHOTOEYE 50%	

DRAWING REVISIONS

REV.	DESCRIPTION	DATE	BY
00	INITIAL DRAWINGS	04/25/2025	SK
A	AS-BUILT	11/13/2025	LB

autStand
Automation Standard

CONFIDENTIAL: THE INFORMATION CONTAINED HEREIN IS PROPRIETARY INFORMATION OF AUTOMATION STANDARD LLC AND CONSTITUTES TRADE SECRETS PURSUANT TO THE UNIFORM TRADE SECRETS ACT. THIS INFORMATION SHALL ONLY BE USED IN THE PERFORMANCE OF CONTRACT WITH AUTSTAND. THIS INFORMATION SHALL NOT BE USED, REPRODUCED OR EMPLOYED IN WHOLE PART, EXCEPT WITH AUTSTAND's PRIOR WRITTEN APPROVAL.

25K Amazon Cross-Belt Sort Center (ACBSC)
S02_2_FIO5H1/S02_2_FIO5H2
S02_2_FIO6H1/S02_2_FIO6H2 IO DRAWINGS

AMAZON MTN6
SPARROWS POINT, MD

FILENAME	
2429-AMZ-MTN6-MCM06-627	
D-SIZE SCALE	JOB NUMBER:
NTS	2429
REVISION	SHEET
A	72

Plotted: 11/21/2025 4:44 PM

S02_2_FIO7H1

06628.01	S02_2_JR13_PB	JAM RESET PUSHBUTTON
06628.02	S02_2_JR13_PB_LT	JAM RESET PUSHBUTTON LIGHT
06628.03	S02_227CH_PX1	PROXIMITY SENSOR
06628.04	S02_227CH_PX2	PROXIMITY SENSOR
06628.05	S02_227CH_GS1_PB	CHUTE ENABLE PUSHBUTTON
06628.06	S02_227CH_GS1_PB_LT	CHUTE ENABLE PUSHBUTTON LIGHT
06628.07	S02_227CH_PE1	FULL PHOTOEYE 100%
06628.08	S02_227CH_PE2	FULL PHOTOEYE 50%
06628.09		
06628.10		

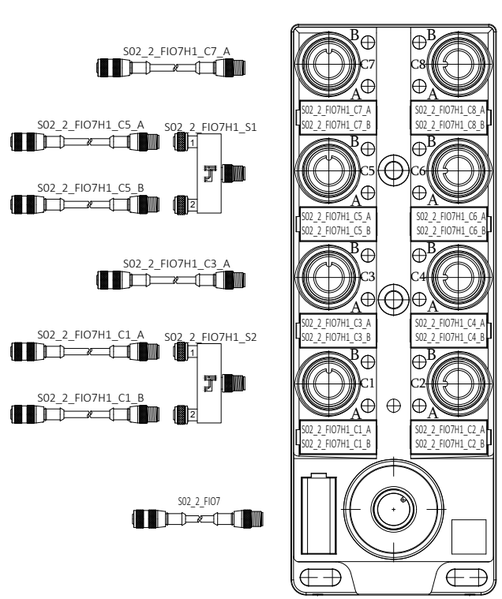

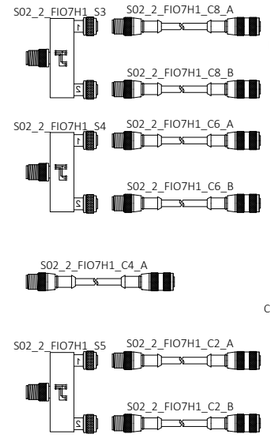

S02_2_LRPE13_RCV	LONG RANGE PHOTOEYE RECEIVER
S02_2_LRPE13_SND	LONG RANGE PHOTOEYE SENDER
S02_225CH_PX1	PROXIMITY SENSOR
S02_225CH_PX2	PROXIMITY SENSOR
S02_225CH_GS1_PB	CHUTE ENABLE PUSHBUTTON
S02_225CH_GS1_PB_LT	CHUTE ENABLE PUSHBUTTON LIGHT
S02_225CH_PE1	FULL PHOTOEYE 100%
S02_225CH_PE2	FULL PHOTOEYE 50%

S02_2_FIO7H2

06628.11	SPARE	SPARE
06628.12	SPARE	SPARE
06628.13	SPARE	S02_229CH_PX1 PROXIMITY SENSOR
06628.14	SPARE	S02_229CH_PX2 PROXIMITY SENSOR
06628.15	SPARE	S02_229CH_GS1_PB CHUTE ENABLE PUSHBUTTON
06628.16	SPARE	S02_229CH_GS1_PB_LT CHUTE ENABLE PUSHBUTTON LIGHT
06628.17	SPARE	S02_229CH_PE1 FULL PHOTOEYE 100%
06628.18	SPARE	S02_229CH_PE2 FULL PHOTOEYE 50%
06628.19		
06628.20		

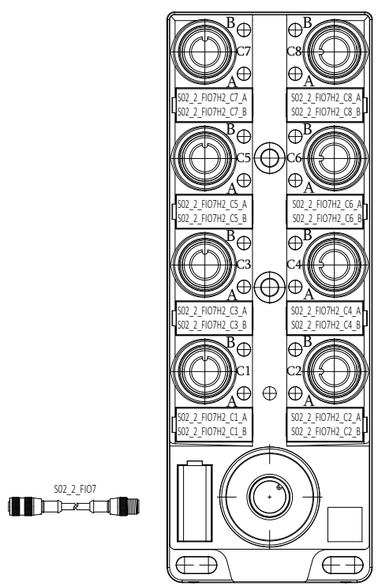

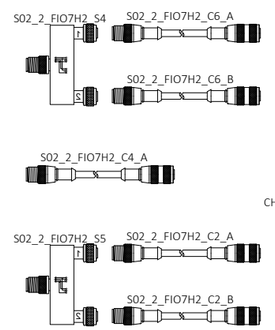

S02_2_FIO8H1

06628.21	S02_2_JR14_PB	JAM RESET PUSHBUTTON
06628.22	S02_2_JR14_PB_LT	JAM RESET PUSHBUTTON LIGHT
06628.23	S02_226CH_PX1	PROXIMITY SENSOR
06628.24	S02_226CH_PX2	PROXIMITY SENSOR
06628.25	S02_226CH_GS1_PB	CHUTE ENABLE PUSHBUTTON
06628.26	S02_226CH_GS1_PB_LT	CHUTE ENABLE PUSHBUTTON LIGHT
06628.27	S02_226CH_PE1	FULL PHOTOEYE 100%
06628.28	S02_226CH_PE2	FULL PHOTOEYE 50%
06628.29		
06628.30		

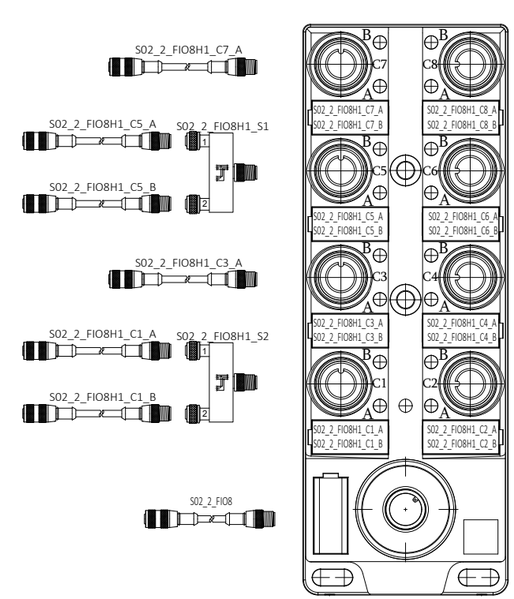

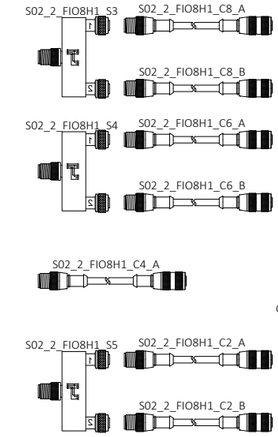

S02_2_LRPE14_RCV	LONG RANGE PHOTOEYE RECEIVER
S02_2_LRPE14_SND	LONG RANGE PHOTOEYE SENDER
S02_228CH_PX1	PROXIMITY SENSOR
S02_228CH_PX2	PROXIMITY SENSOR
S02_228CH_GS1_PB	CHUTE ENABLE PUSHBUTTON
S02_228CH_GS1_PB_LT	CHUTE ENABLE PUSHBUTTON LIGHT
S02_228CH_PE1	FULL PHOTOEYE 100%
S02_228CH_PE2	FULL PHOTOEYE 50%

S02_2_FIO8H2

06628.31	SPARE	SPARE
06628.32	SPARE	SPARE
06628.33	S02_230CH_PX1 PROXIMITY SENSOR	SPARE
06628.34	S02_230CH_PX2 PROXIMITY SENSOR	SPARE
06628.35	S02_230CH_GS1_PB CHUTE ENABLE PUSHBUTTON	SPARE
06628.36	S02_230CH_GS1_PB_LT CHUTE ENABLE PUSHBUTTON LIGHT	SPARE
06628.37	S02_230CH_PE1 FULL PHOTOEYE 100%	SPARE
06628.38	S02_230CH_PE2 FULL PHOTOEYE 50%	SPARE
06628.39		
06628.40		

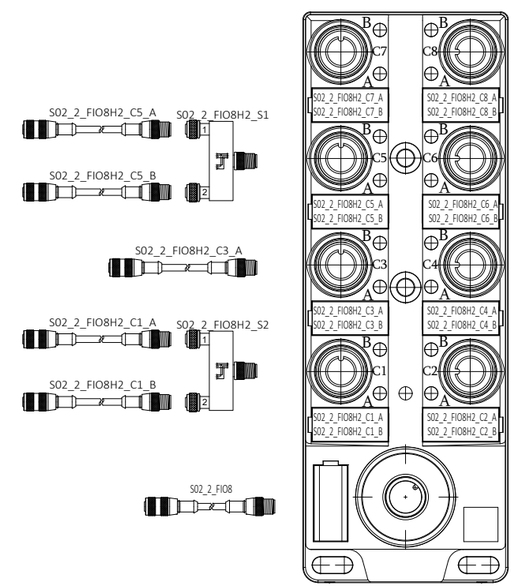

DRAWING REVISIONS

REV	DESCRIPTION	DATE	BY
00	INITIAL DRAWINGS	04/25/2025	SK
A	AS-BUILT	11/13/2025	LB

autStand
Automation Standard

CONFIDENTIAL: THE INFORMATION CONTAINED HEREIN IS PROPRIETARY INFORMATION OF AUTOMATION STANDARD LLC AND CONSTITUTES TRADE SECRETS PURSUANT TO THE UNIFORM TRADE SECRETS ACT. THIS INFORMATION SHALL ONLY BE USED IN THE PERFORMANCE OF CONTRACT WITH AUTSTAND. THIS INFORMATION SHALL NOT BE USED, REPRODUCED OR EMPLOYED IN WHOLE PART, EXCEPT WITH AUTSTAND'S PRIOR WRITTEN APPROVAL.

25K Amazon Cross-Belt Sort Center (ACBSC)
S02_2_FIO7H1/S02_2_FIO7H2
S02_2_FIO8H1/S02_2_FIO8H2 IO DRAWINGS

AMAZON MTN6
SPARROWS POINT, MD

FILENAME	
2429-AMZ-MTN6-MCM06-628	
D-SIZE SCALE	JOB NUMBER:
NTS	2429
REVISION	SHEET
A	73

Plotted: 11/21/2025 4:44 PM